F.8L Falco Baffling Drawings

1/12/2018

A

Right Front

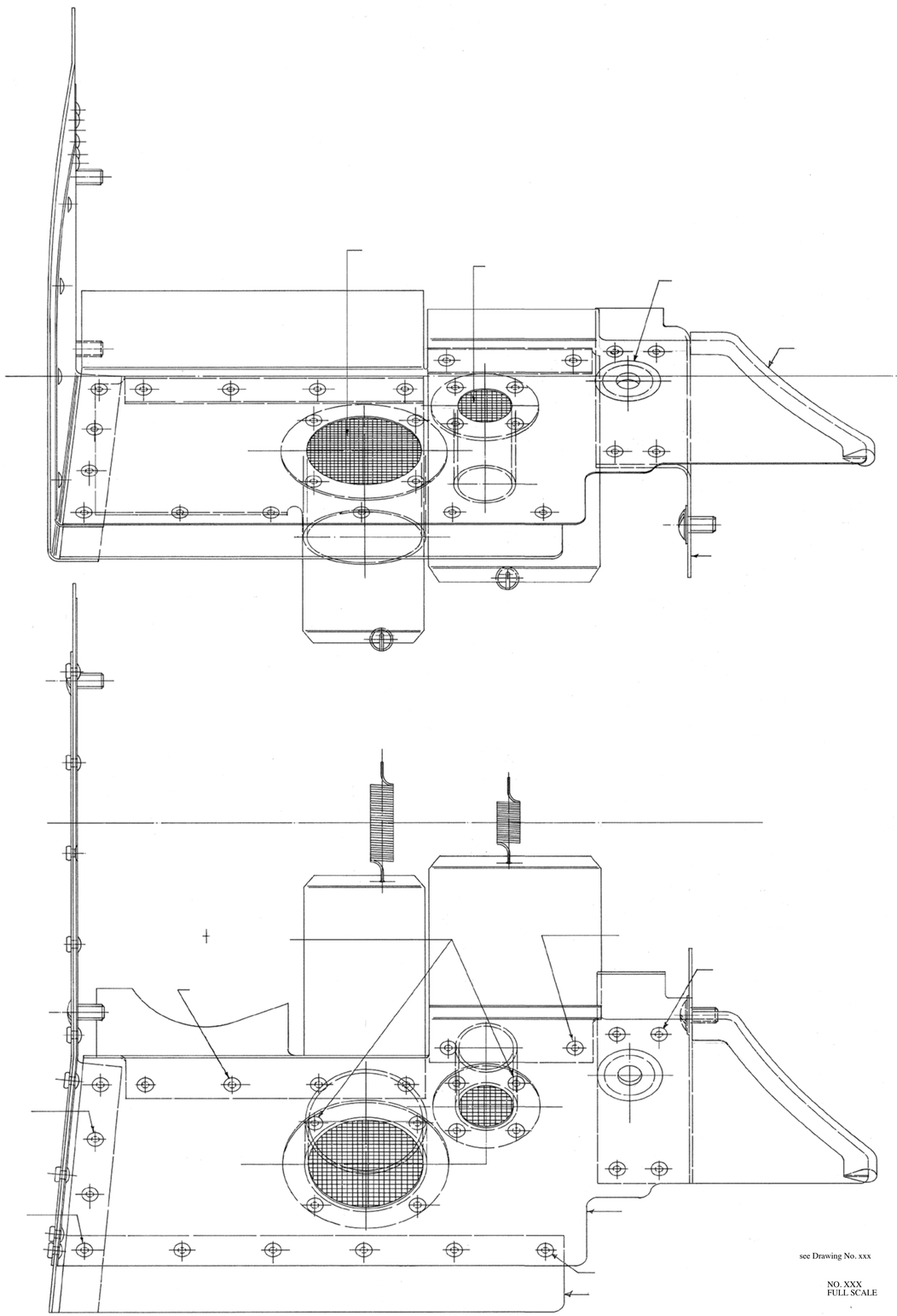

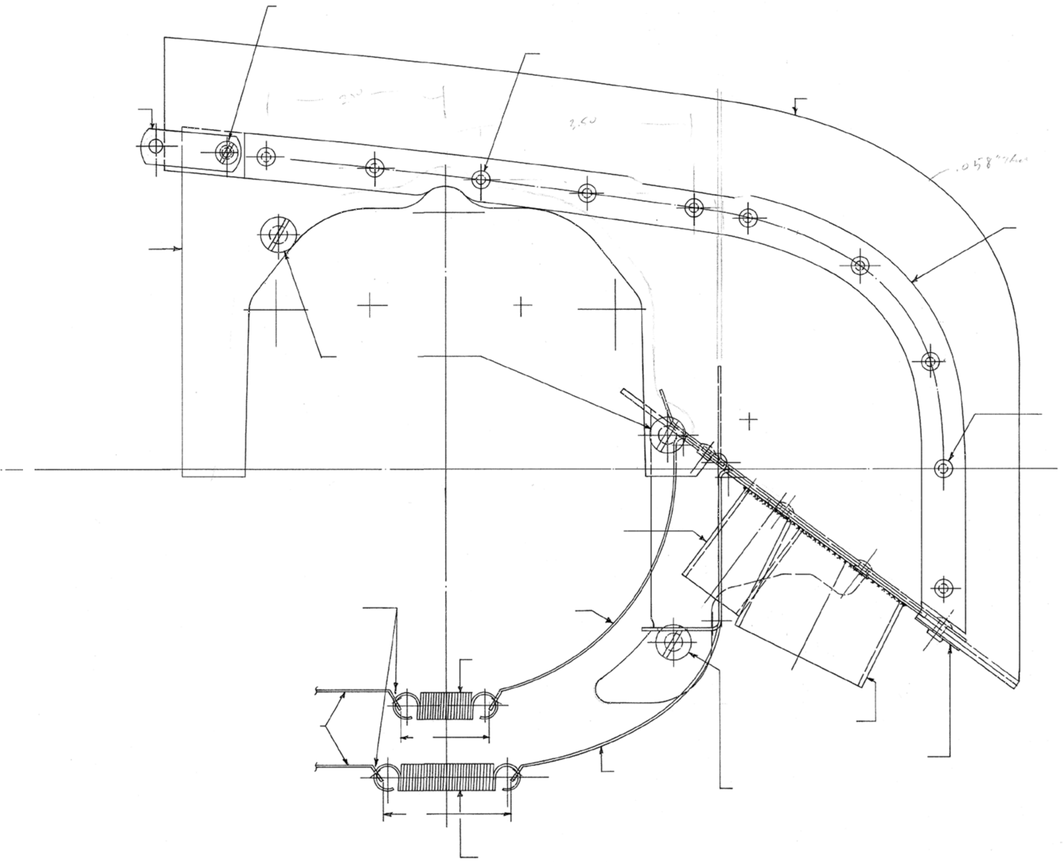

see Drawing No. xxx

NO. XXX
FULL SCALE

Right Front Baffle Assembly & Installation
Full Scale

F.8L FALCO

Sequoia Aircraft Corporation
2000 Tomlynn Street
P.O. Box 6861
Richmond, Virginia 23230

Sheet	
A1	
Revision	?

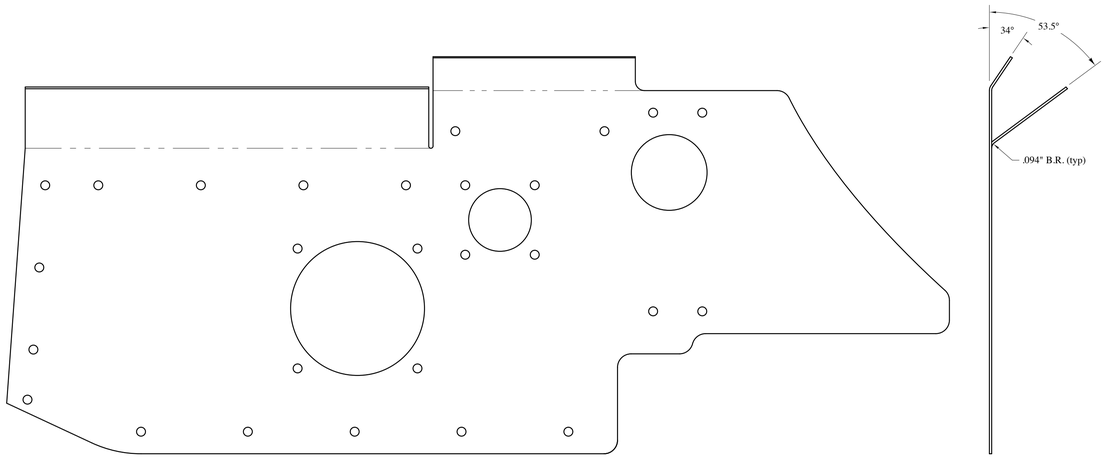

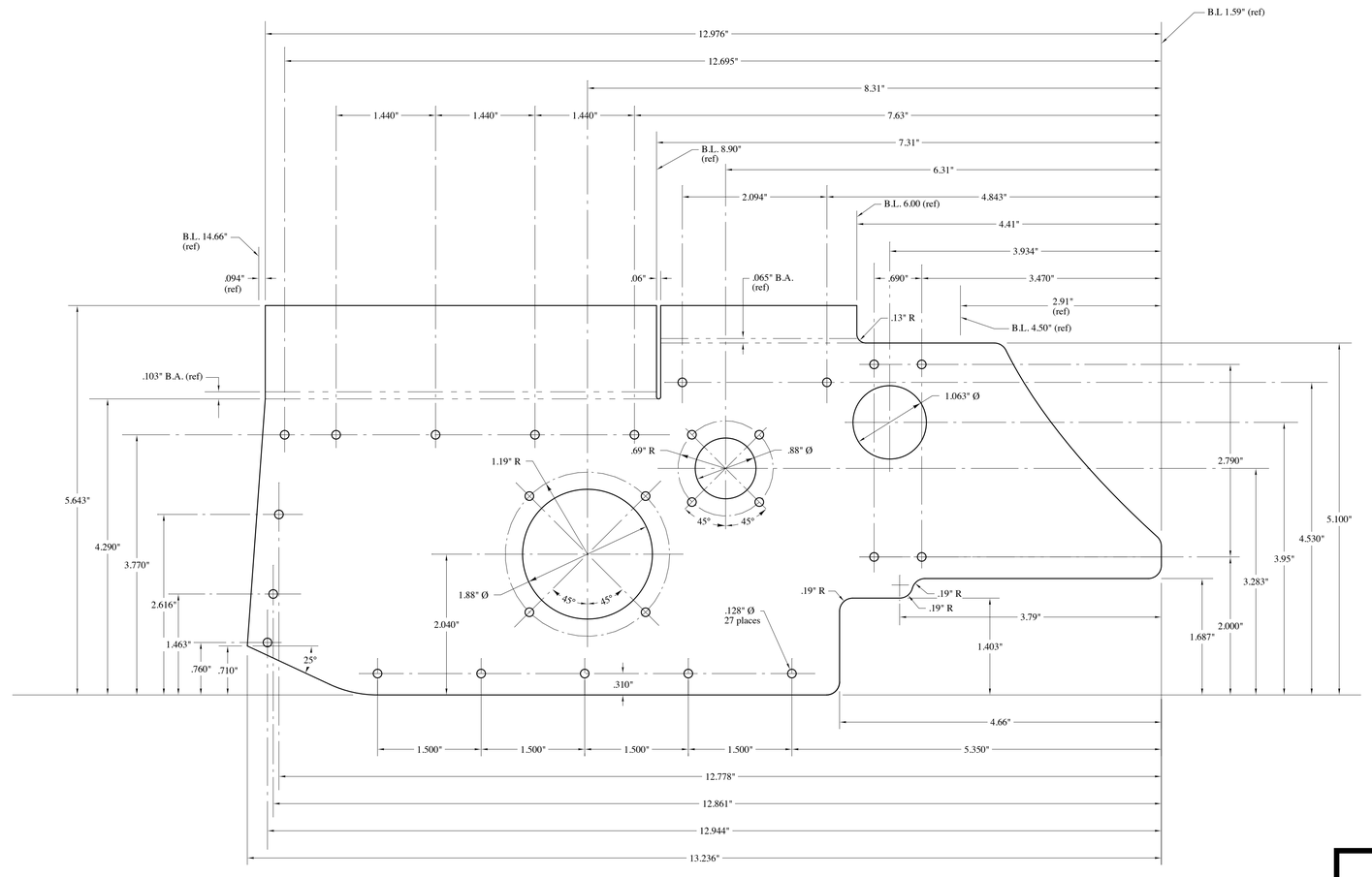

material: .032" 2024-T3 alclad aluminum sheet
alodine

see Drawing No. xxx

NO. 808-1 RIGHT FRONT BAFFLE — 320 SERIES
ONE REQUIRED PER AIRCRAFT
FULL SCALE

NO. XXX
FULL SCALE

F.8L FALCO

Sequoia Aircraft Corporation
2000 Tomlynn Street
P.O. Box 6861
Richmond, Virginia 23230

Sheet
A2

Revision ?

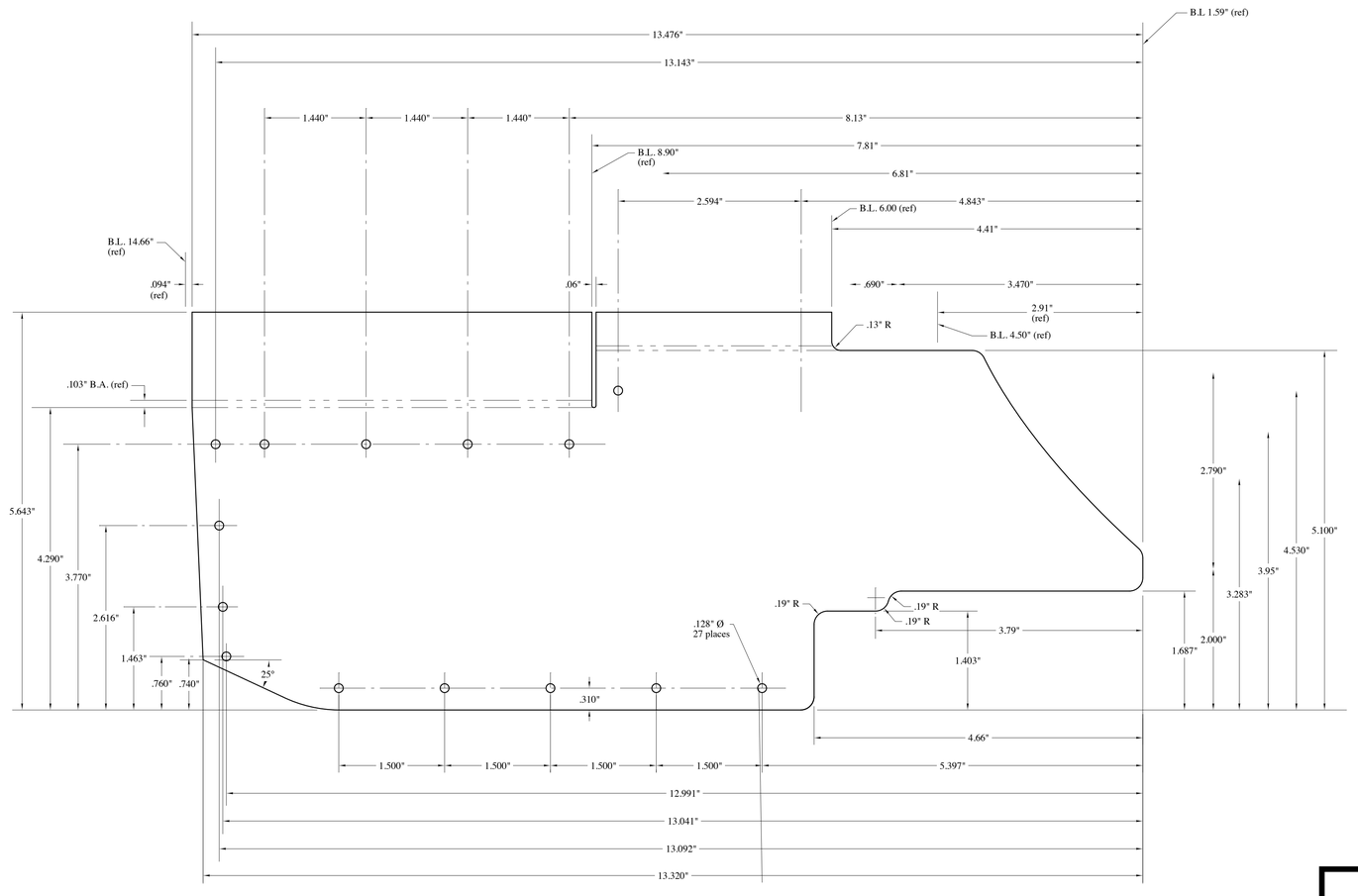

material: .032" 2024-T3 alclad aluminum sheet
alodine

see Drawing No. xxx

NO. XXX
FULL SCALE

NO. 808-2 RIGHT FRONT BAFFLE — 360 SERIES
ONE REQUIRED PER AIRCRAFT
FULL SCALE

F.8L FALCO

Sequoia Aircraft Corporation
2000 Tomlynn Street
P.O. Box 6861
Richmond, Virginia 23230

Sheet
A3

Revision ?

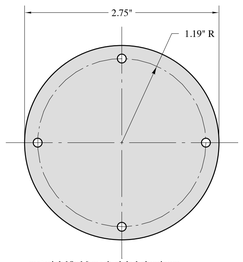

material: 18x16 mesh alclad aluminum
insect screening (Phifer wire products)

NO. 808-17 CABIN HEAT DUCT SCREEN
ONE REQUIRED PER AIRCRAFT
FULL SCALE

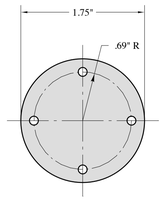

material: 18x16 mesh alclad aluminum
insect screening (Phifer wire products)

NO. 808-18 ALTERNATOR COOLING DUCT SCREEN
ONE REQUIRED PER AIRCRAFT
FULL SCALE

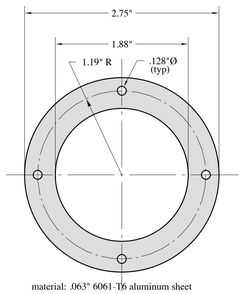

material: .063" 6061-T6 aluminum sheet

NO. 808-75 FLANGE
ONE REQUIRED PER AIRCRAFT
FULL SCALE

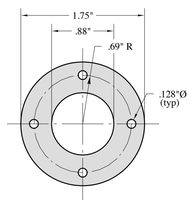

material: .063" 6061-T6 aluminum sheet

NO. 808-76 FLANGE
ONE REQUIRED PER AIRCRAFT
FULL SCALE

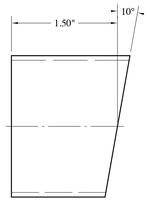

material: 2.00"OD x .065" wall
6061-T6 aluminum tubing

NO. 808-77 BLAST TUBE
ONE REQUIRED PER AIRCRAFT
FULL SCALE

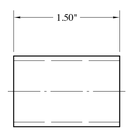

material: 1.00"OD x .065" wall
6061-T6 aluminum tubing

NO. 808-78 BLAST TUBE
ONE REQUIRED PER AIRCRAFT
FULL SCALE

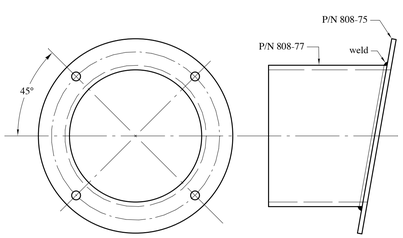

alodine

NO. 808-15 CABIN HEAT DUCT FLANGE
ONE REQUIRED PER AIRCRAFT
FULL SCALE

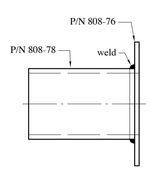

alodine

NO. 808-16 ALTERNATOR DUCT FLANGE
ONE REQUIRED PER AIRCRAFT
FULL SCALE

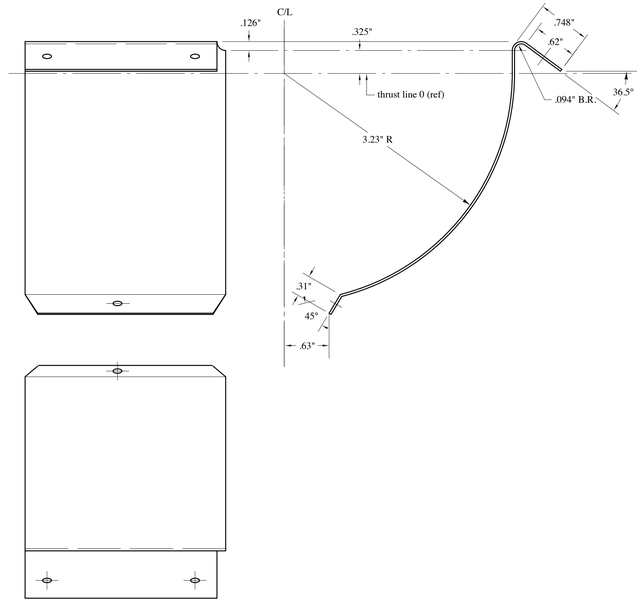

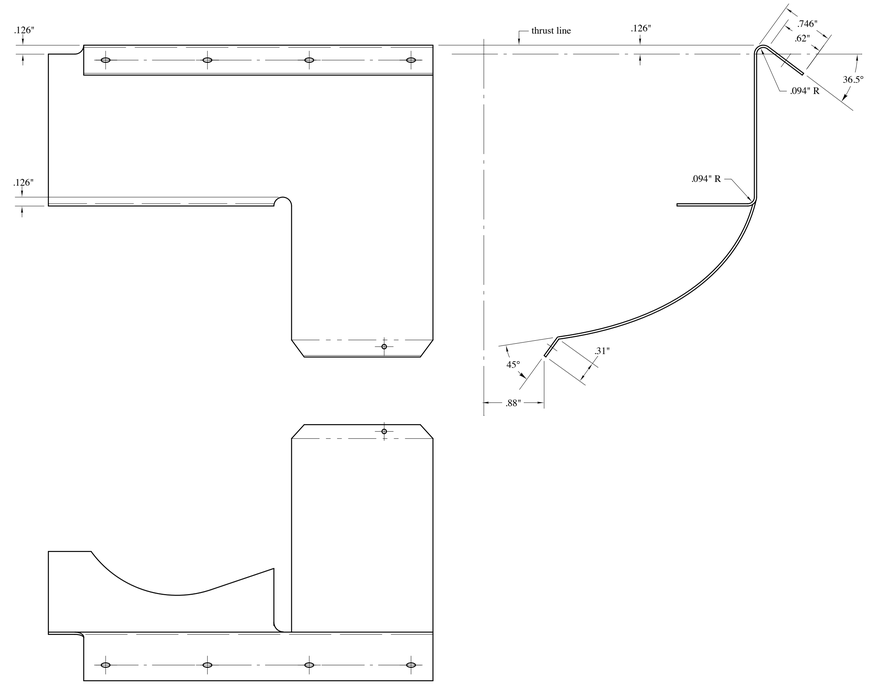

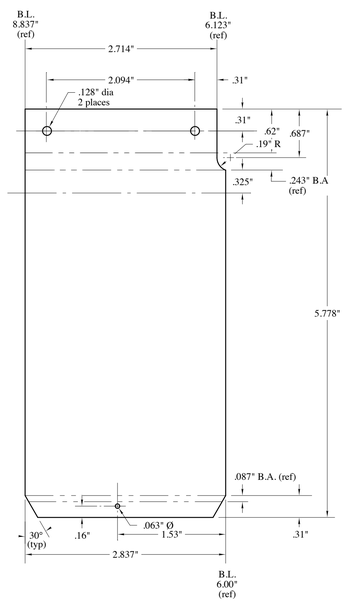

material: .032" 2024-T3 alclad aluminum sheet
alodine

NO. 808-3 RIGHT FRONT CYLINDER BAFFLE — 320 SERIES
ONE REQUIRED PER AIRCRAFT
FULL SCALE

see Drawing No. xxx

NO. XXX
FULL SCALE

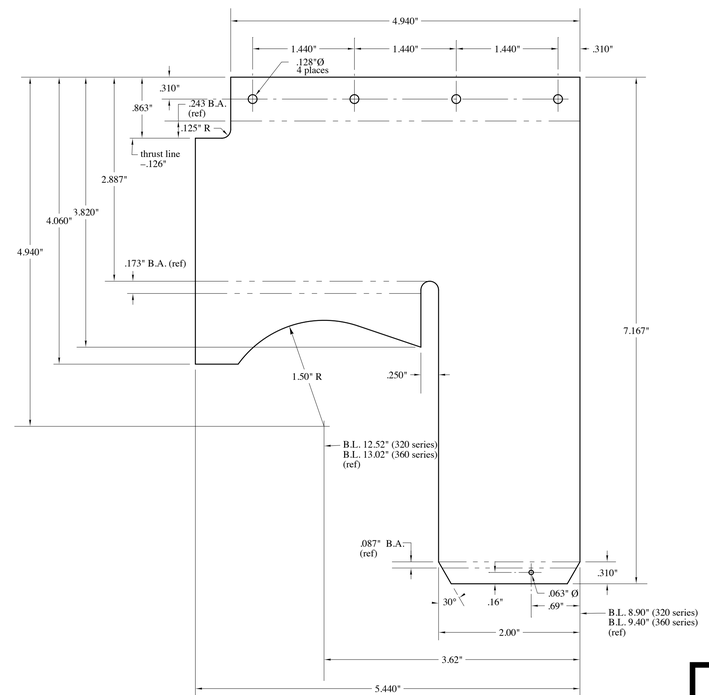

material: .032" 2024-T3 alclad aluminum sheet
alodine

NO. 808-14 RIGHT FRONT CYLINDER HEAD BAFFLE — 320 & 360 SERIES
ONE REQUIRED PER AIRCRAFT
FULL SCALE

F8L FALCO

Sequoia Aircraft Corporation
2000 Tomlynn Street
P.O. Box 6861
Richmond, Virginia 23230

Sheet
A4
Revision ?

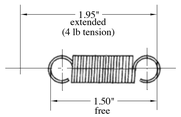

Lee Spring LE-045D-5MW
3/8" OD x .045" dia music wire
spring rate 8.8 lb/in

NO. 808-36 CYLINDER HEAD BAFFLE SPRING — 320 & 360 SERIES
4 REQUIRED PER AIRCRAFT
FULL SCALE

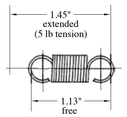

Lee Spring LE-045D-2MW
3/8" OD x .045" dia music wire
spring rate 15.6 lb/in

NO. 808-35 CYLINDER BAFFLE SPRING — 320 & 360 SERIES
4 REQUIRED PER AIRCRAFT
FULL SCALE

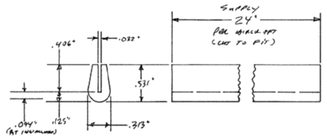

material: Minor Rubber Co.
2X-4002 (inventory control No. 094953)
synthetic rubber (60 durometer)

NO. 808-19 CUSHION/SEAL
ONE REQUIRED PER AIRCRAFT
FULL SCALE

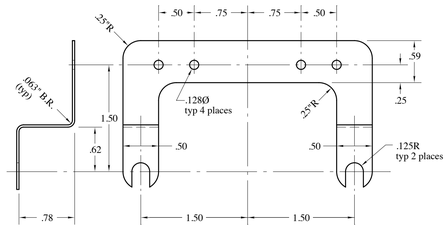

Note: This part is identical to Piper P/N 63605-00

material: .032" 4130N steel sheet, MIL-S-19729
cadmium plate

No. 808-49 BRACKET
ONE REQUIRED PER AIRCRAFT
FULL SCALE

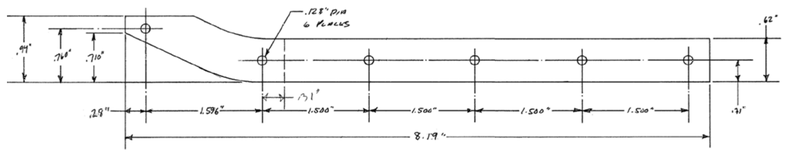

material: .032" 2024-T3 alclad aluminum sheet
alodine

NO. 808-11 FRONT BAFFLE STRIP — O-320 & O-360 SERIES
TWO REQUIRED PER AIRCRAFT
FULL SCALE

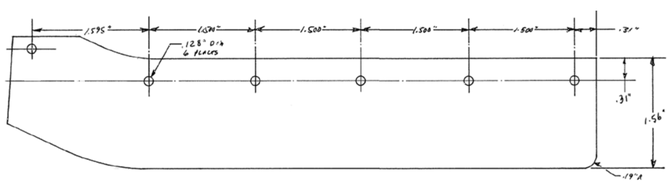

material: Goodyear A-386 nylon reinforced wingprene (.052" thick)

NO. 808-12 FRONT BAFFLE SEAL — O-320 & O-360 SERIES
TWO REQUIRED PER AIRCRAFT
FULL SCALE

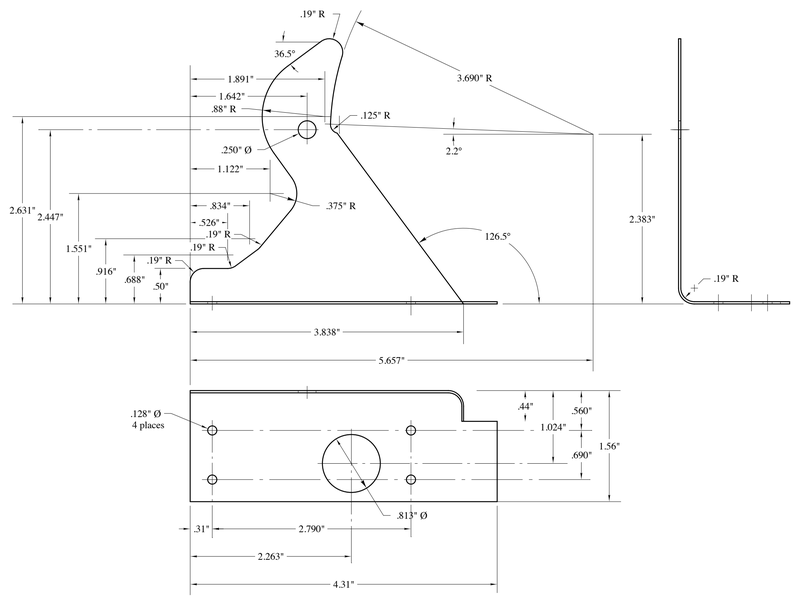

material: .032" 2024-T3 alclad aluminum sheet
alodine

NO. 808-13 RIGHT INBOARD BAFFLE SUPPORT — O-320 & O-360 SERIES
ONE REQUIRED PER AIRCRAFT
FULL SCALE

see Drawing No. xxx

NO. XXX
FULL SCALE

F.8L FALCO

Sequoia Aircraft Corporation
2000 Tomlynn Street
P.O. Box 6861
Richmond, Virginia 23230

Sheet
A5
Revision ?

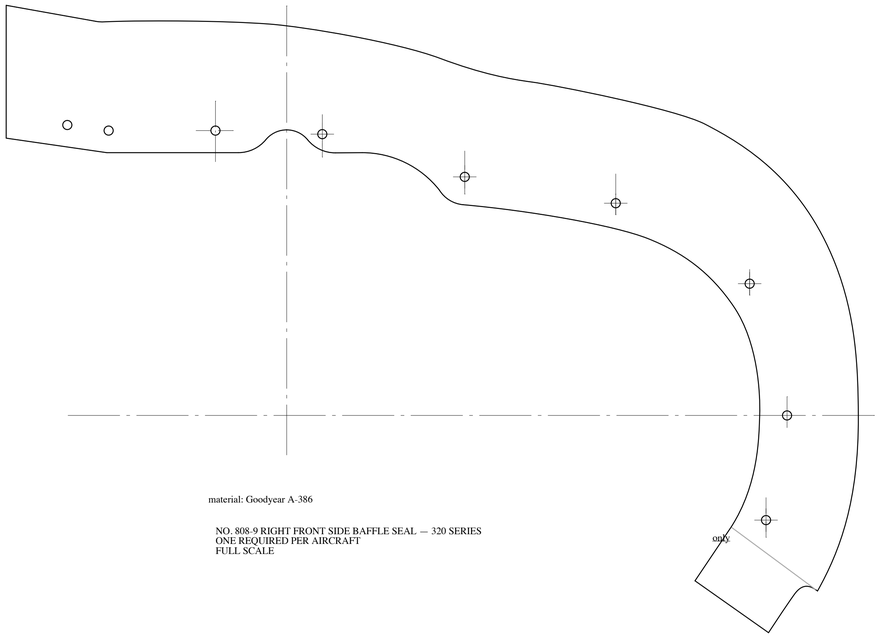

material: Goodyear A-386

NO. 808-9 RIGHT FRONT SIDE BAFFLE SEAL — 320 SERIES
ONE REQUIRED PER AIRCRAFT
FULL SCALE

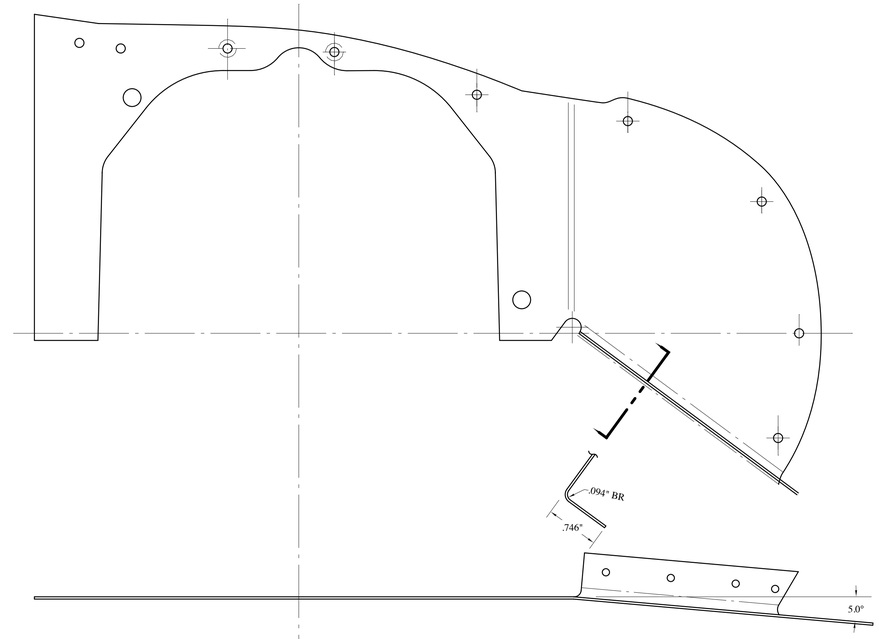

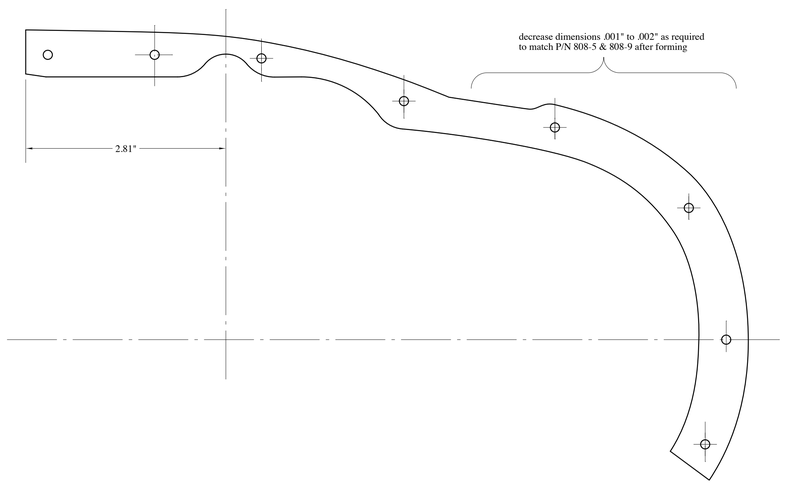

material: .032" 2024-T3 alclad aluminum sheet
alodine

NO. 808-7 RIGHT FRONT SIDE BAFFLE STRIP — 320 SERIES
ONE REQUIRED PER AIRCRAFT
FULL SCALE

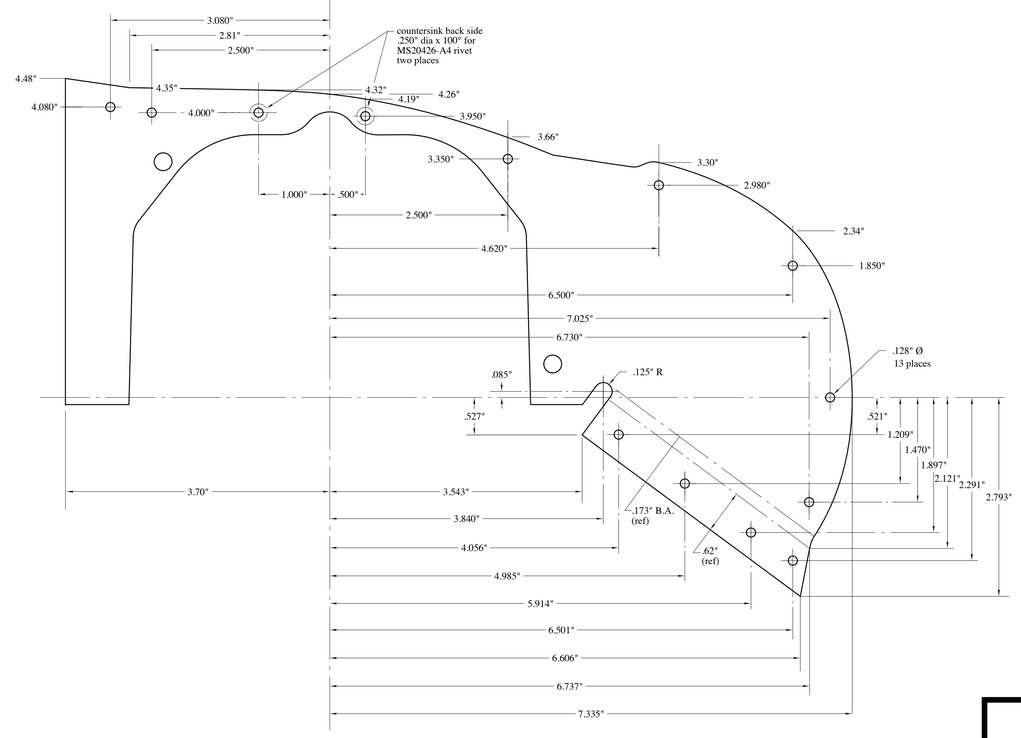

material: .032" 2024-T3 alclad aluminum sheet
alodine

NO. 808-5 RIGHT FRONT SIDE BAFFLE — 320 SERIES
ONE REQUIRED PER AIRCRAFT
FULL SCALE

see Drawing No. xxx

NO. XXX
FULL SCALE

F.8L FALCO

Sequoia Aircraft Corporation
2000 Tomlynn Street
P.O. Box 6861
Richmond, Virginia 23230

Sheet
A6

Revision ?

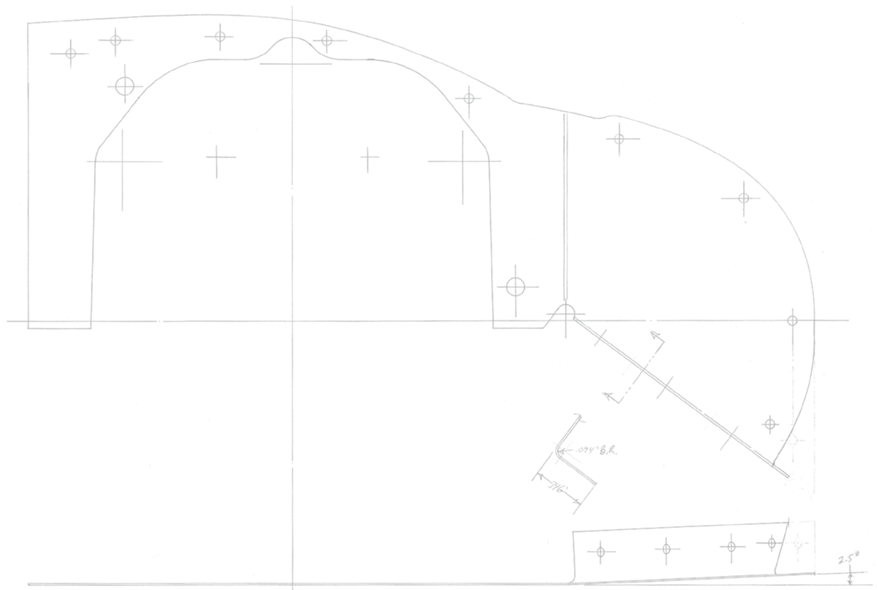

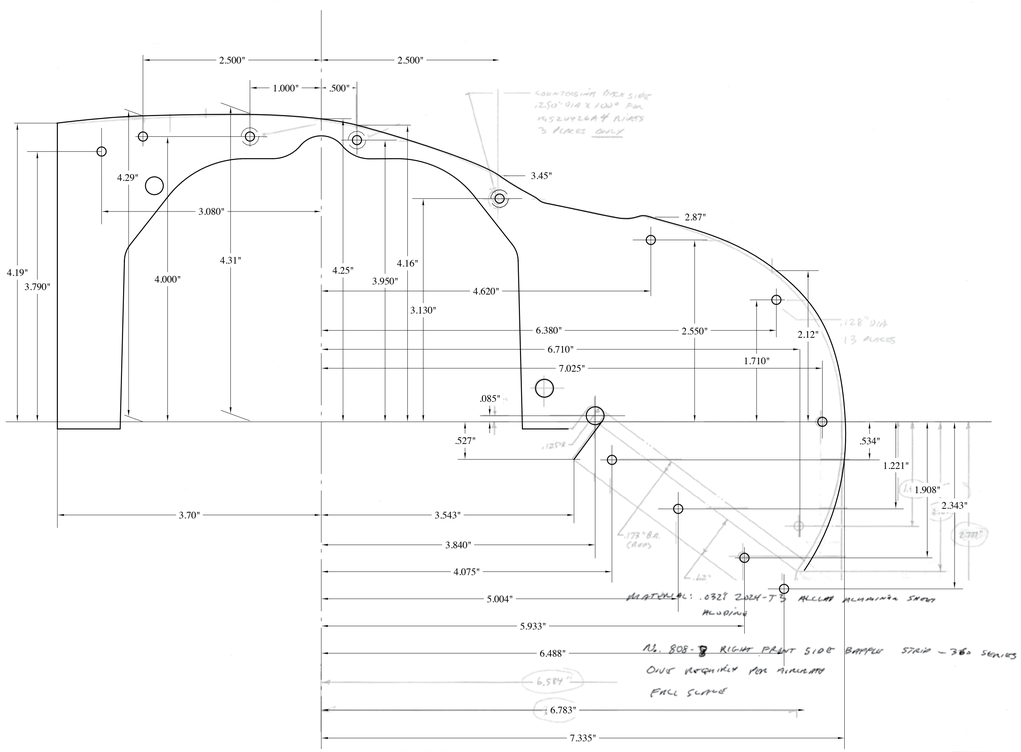

material: .032" 2024-T3 alclad aluminum sheet
alodine

NO. 808-6 RIGHT FRONT SIDE BAFFLE — 360 SERIES
ONE REQUIRED PER AIRCRAFT
FULL SCALE

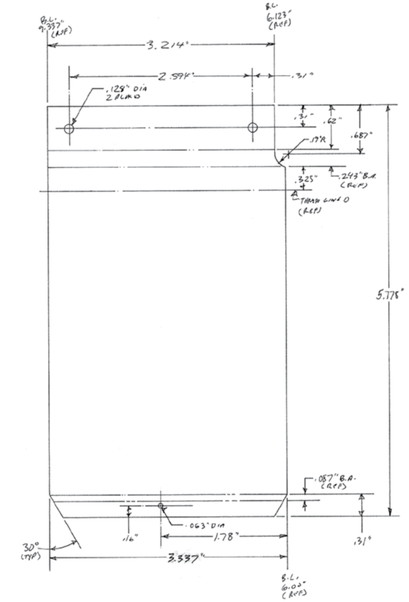

MATERIAL: .032" 2024-T3 ALCLAD ALUMINUM SHEET
ALODINE

NO. 808-4 RIGHT FRONT CYLINDER BAFFLE - 360 SERIES
ONE REQUIRED PER AIRCRAFT
FULL SCALE

see Drawing No. xxx

NO. XXX
FULL SCALE

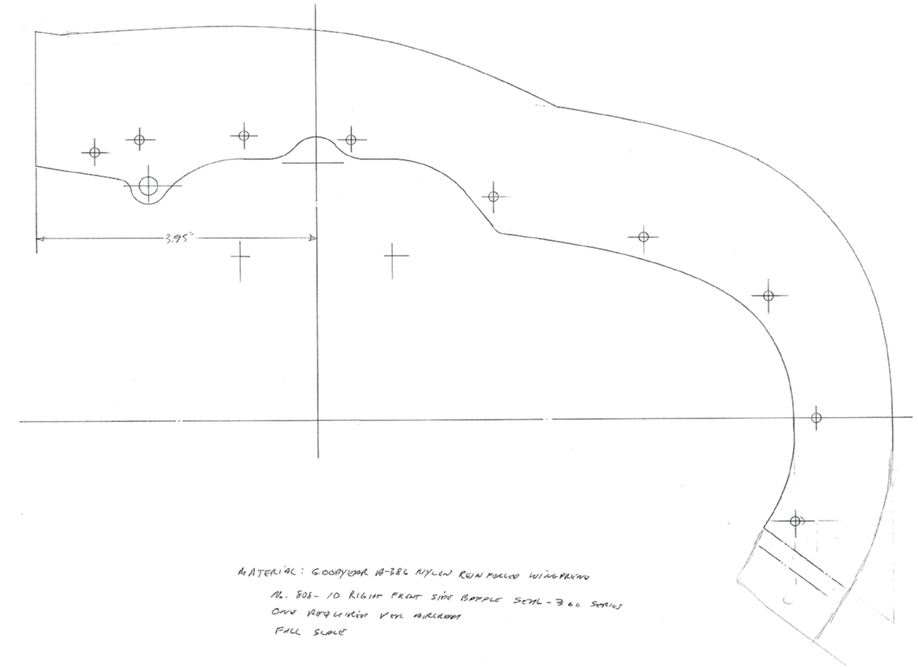

MATERIAL: GOODYEAR 18-286 NYLON REINFORCED WINGFABRIC
NO. 808-10 RIGHT FRONT SIDE BAFFLE STRIP - 360 SERIES
ONE REQUIRED PER AIRCRAFT
FULL SCALE

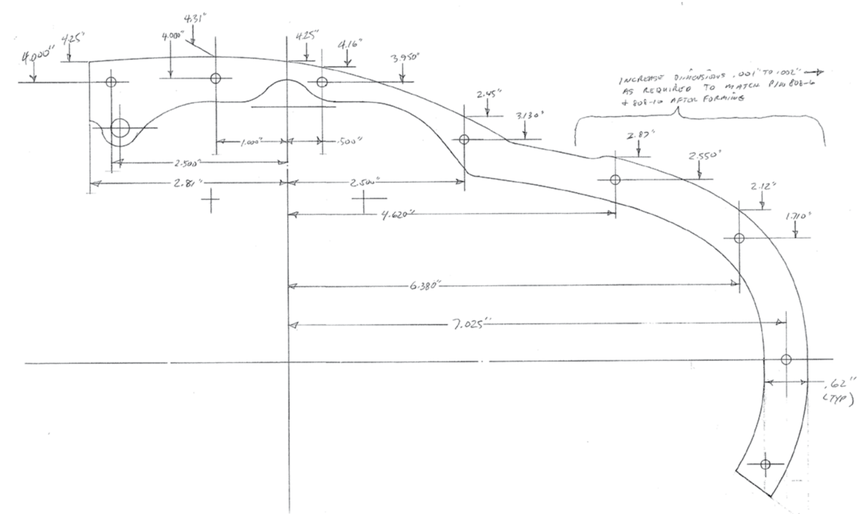

F8L FALCO

Sequoia Aircraft Corporation
2000 Tomlynn Street
P.O. Box 6861
Richmond, Virginia 23230

Sheet
A7
Revision ?

B

Right Front

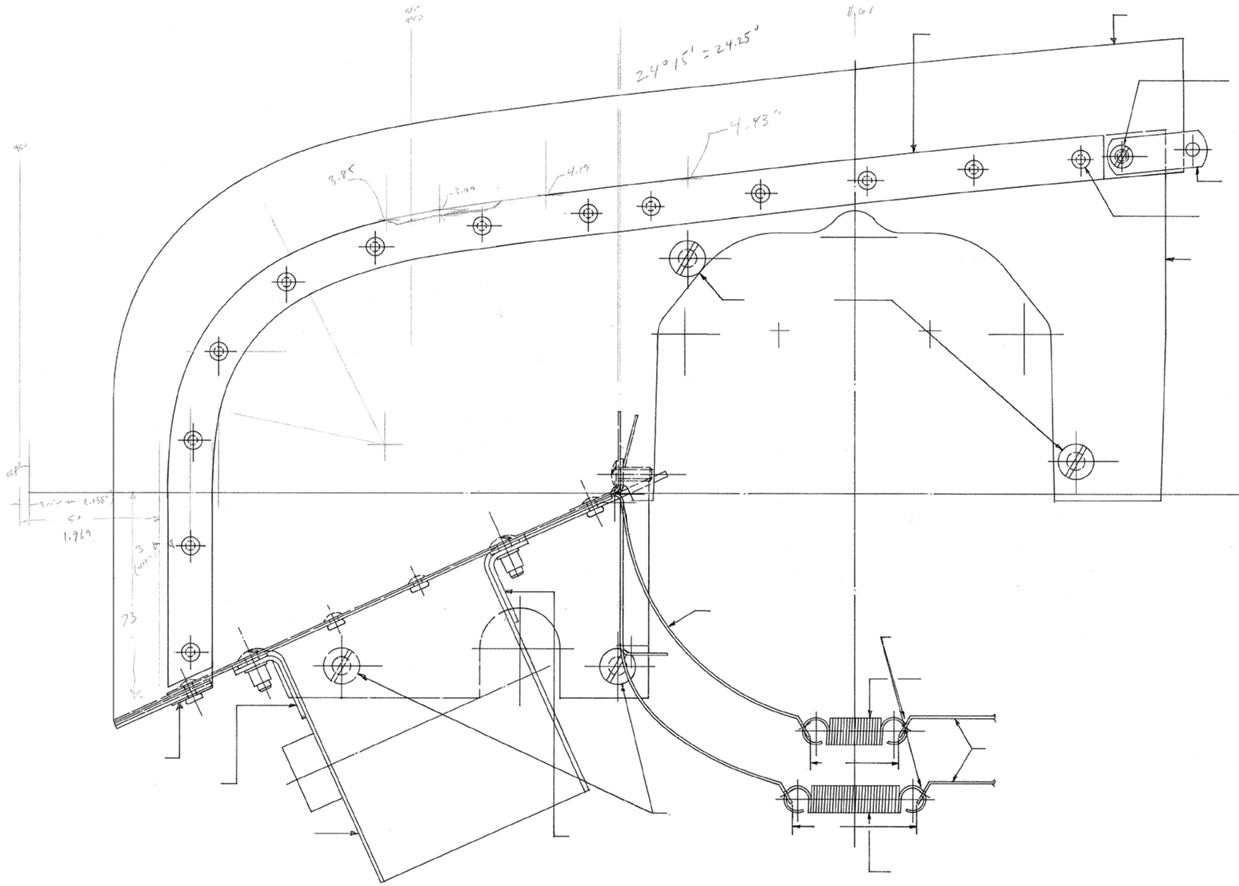

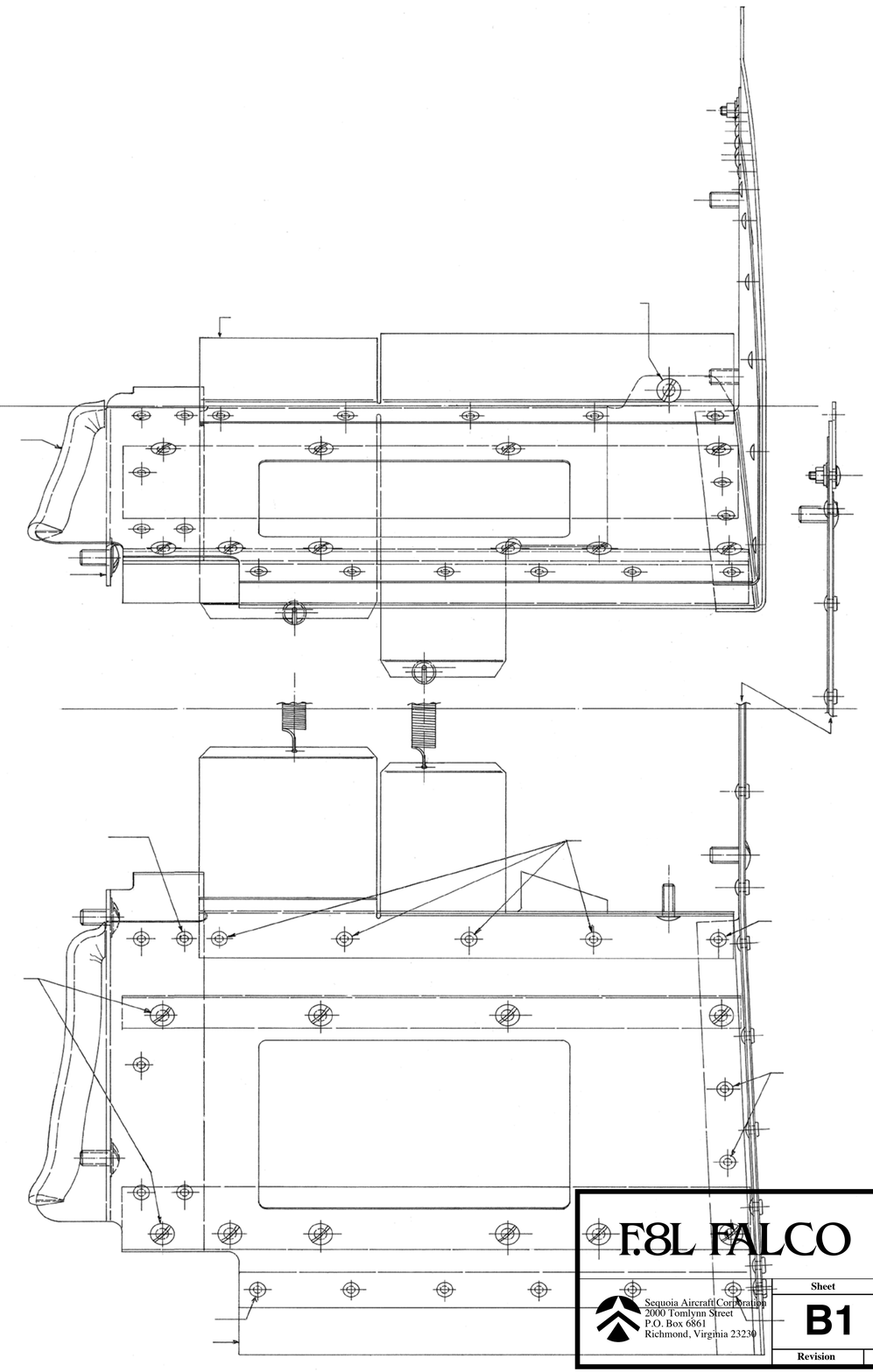

LEFT FRONT BAFFLE ASSEMBLY INSTALLATION
FULL SCALE

see Drawing No. xxx

NO. XXX
FULL SCALE

F.8L FALCO

Sequoia Aircraft Corporation
2000 Tomlynn Street
P.O. Box 6861
Richmond, Virginia 23230

Sheet
B1

Revision ?

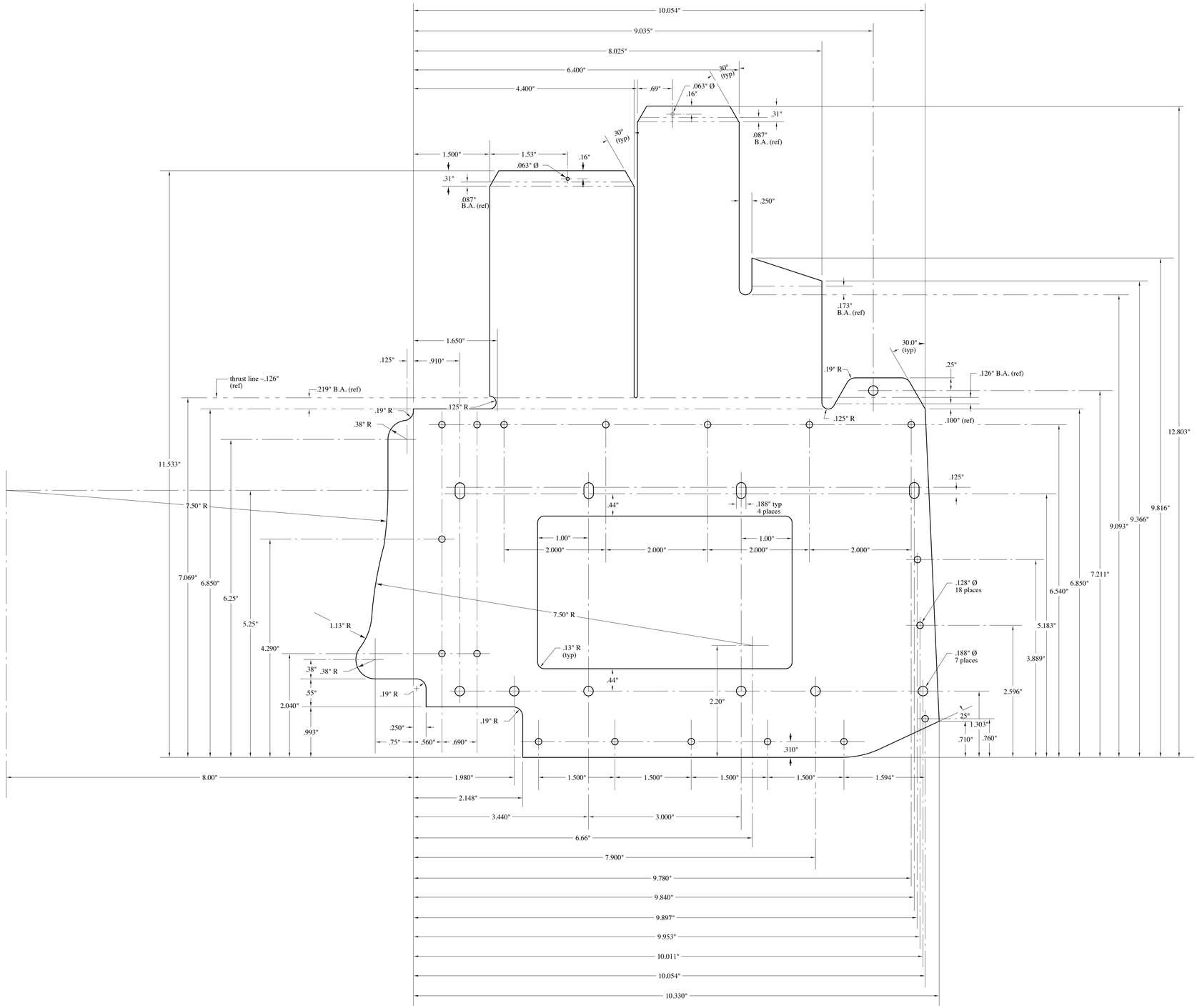

material: .032" 2024-T3 Alclad aluminum sheet
alodine

see Drawing No. xxx

NO. XXX
FULL SCALE

NO. 808-20 LEFT FRONT BAFFLE — 320 SERIES, SHEET 1
ONE REQUIRED PER AIRCRAFT
FULL SCALE

F.8L FALCO

Sequoia Aircraft Corporation
2000 Tomlynn Street
P.O. Box 6861
Richmond, Virginia 23230

Sheet
B2
Revision ?

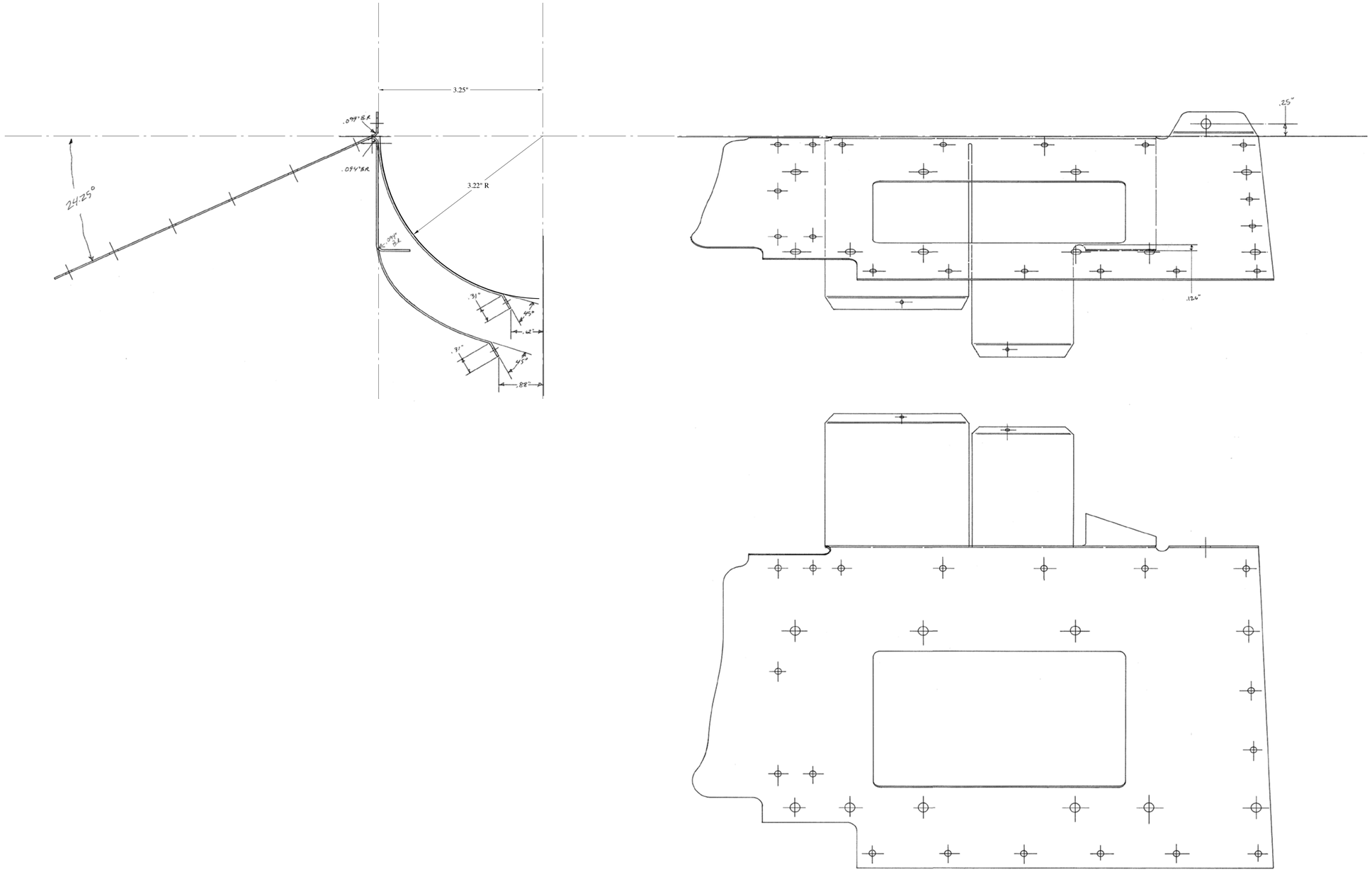

NO. 808-20 LEFT FRONT BAFFLE — 320 SERIES, SHEET 2
ONE REQUIRED PER AIRCRAFT
FULL SCALE

see Drawing No. xxx

NO. XXX
FULL SCALE

F.8L FALCO

Sequoia Aircraft Corporation
2000 Tomlynn Street
P.O. Box 6861
Richmond, Virginia 23230

Sheet
B3

Revision ?

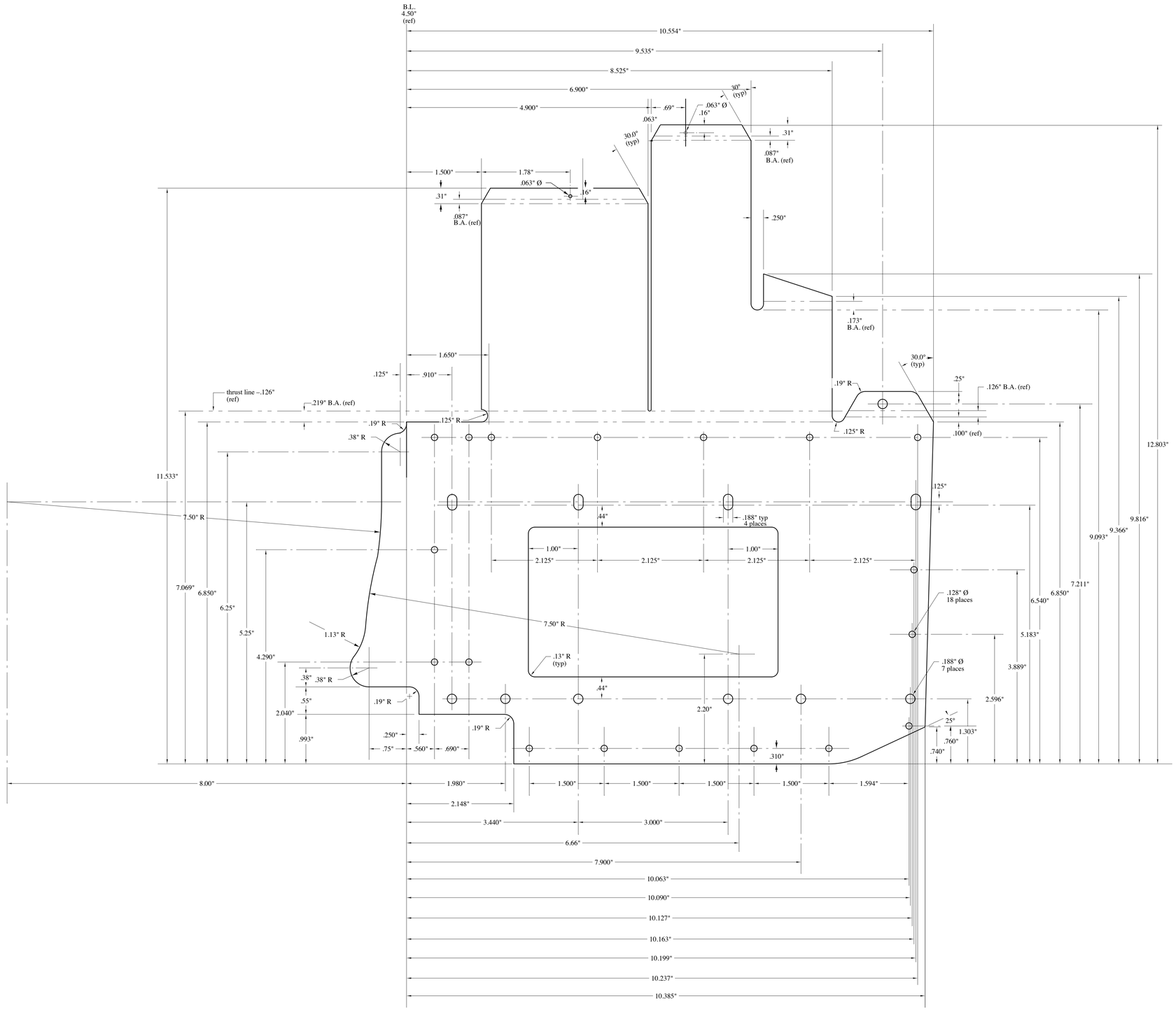

material: .032" 2024-T3 Alclad aluminum sheet
alodine

see Drawing No. xxx

NO. 808-21 LEFT FRONT BAFFLE — 360 SERIES
ONE REQUIRED PER AIRCRAFT
FULL SCALE

NO. XXX
FULL SCALE

F.8L FALCO

Sequoia Aircraft Corporation
2000 Tomlynn Street
P.O. Box 6861
Richmond, Virginia 23230

Sheet
B4

Revision ?

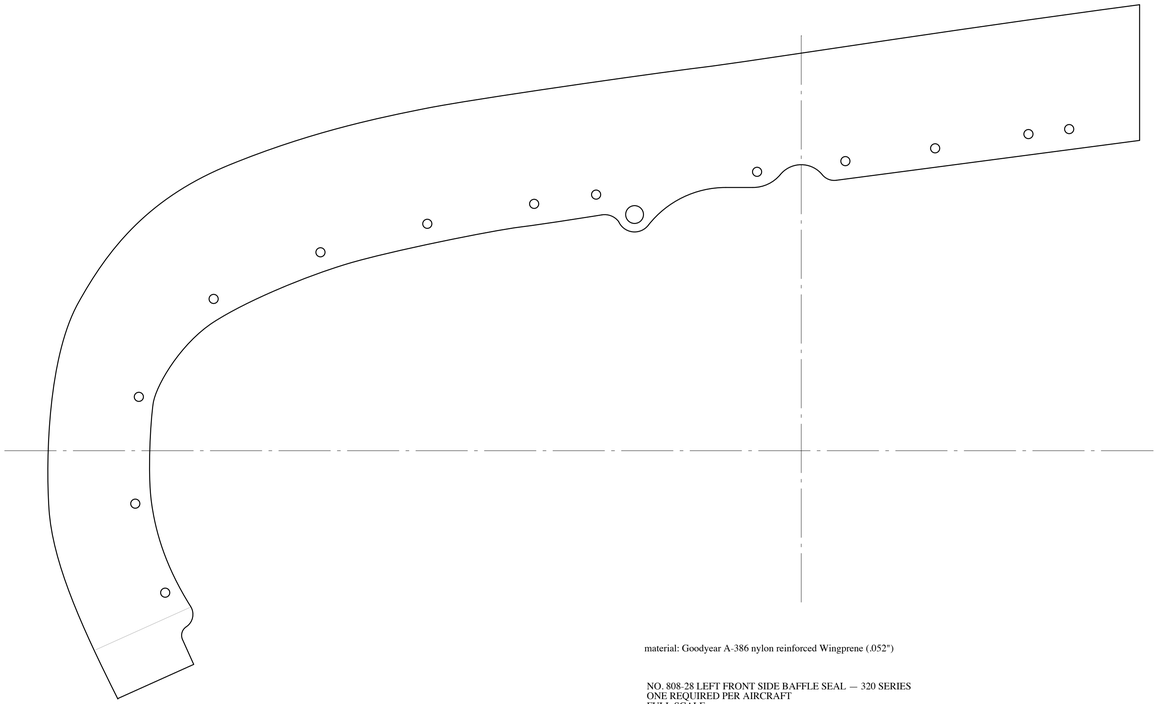

material: Goodyear A-386 nylon reinforced Wingprene (.052")

NO. 808-28 LEFT FRONT SIDE BAFFLE SEAL — 320 SERIES
ONE REQUIRED PER AIRCRAFT
FULL SCALE

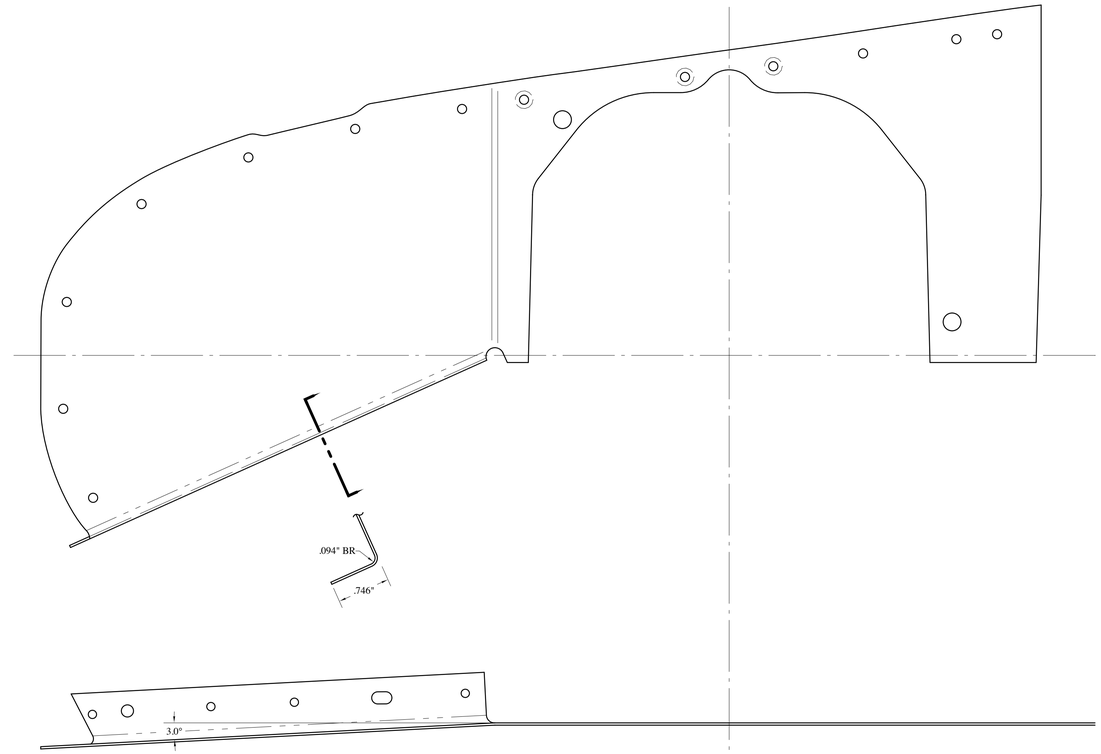

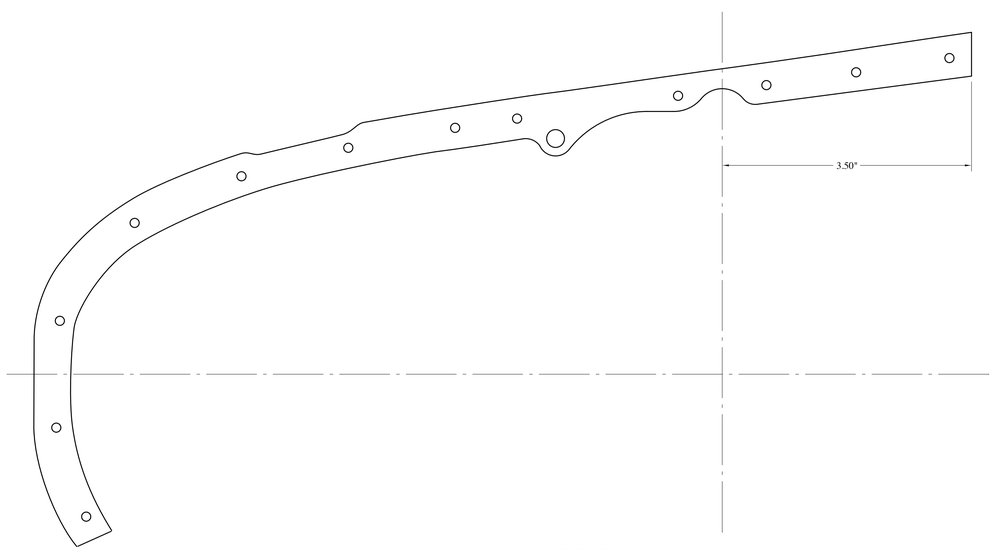

material: .032" 2024-T3 Alclad aluminum sheet
alodine

NO. 808-26 LEFT FRONT SIDE BAFFLE STRIP — 320 SERIES
ONE REQUIRED PER AIRCRAFT
FULL SCALE

see Drawing No. xxx

NO. XXX
FULL SCALE

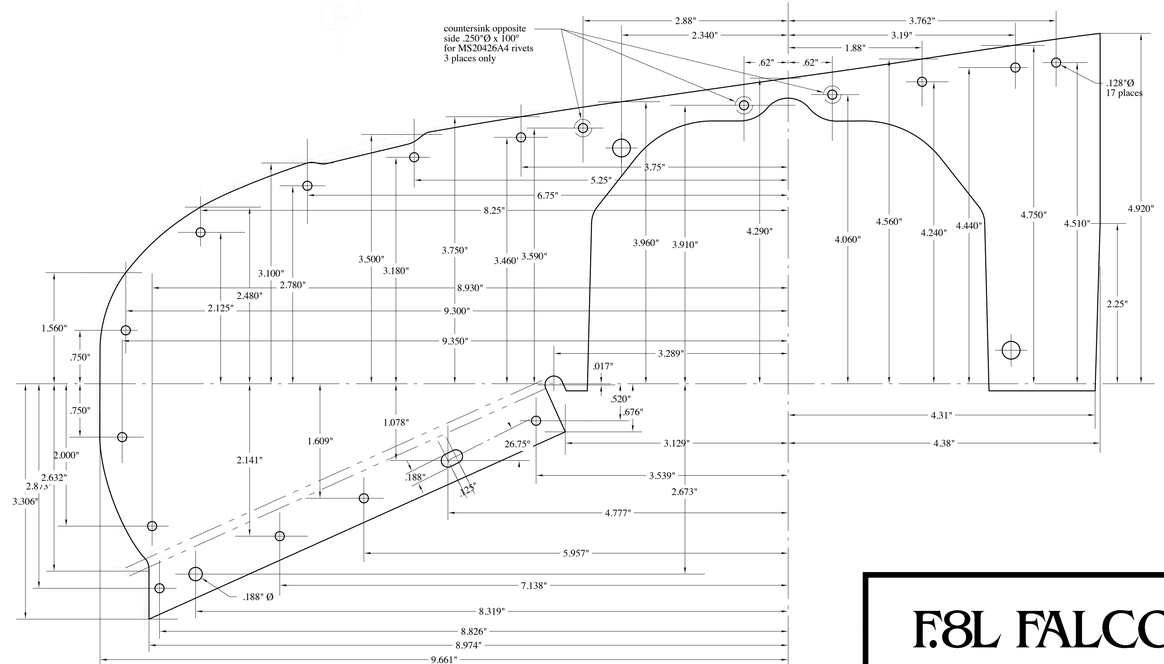

material: .032" 2024-T3 Alclad aluminum sheet
alodine

NO. 808-24 LEFT FRONT SIDE BAFFLE — 320 SERIES
ONE REQUIRED PER AIRCRAFT
FULL SCALE

F.8L FALCO

Sequoia Aircraft Corporation
2000 Tomlynn Street
P.O. Box 6861
Richmond, Virginia 23230

Sheet
B5
Revision ?

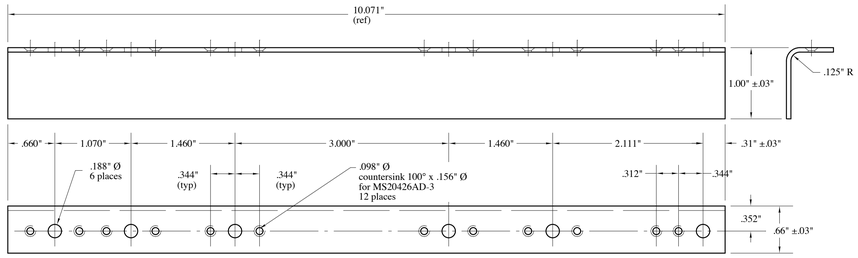

material: .063" 2024-0 alclad aluminum
heat treat to T4
alodine

NO. 808-67 FORWARD OIL COOLER SUPPORT — 320 SERIES
ONE REQUIRED PER AIRCRAFT
FULL SCALE

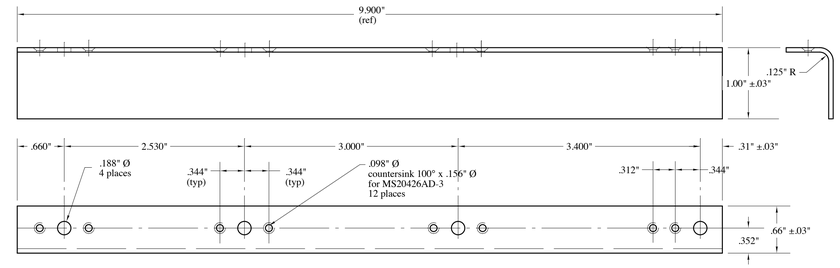

material: .063" 2024-0 alclad aluminum
heat treat to T4
alodine

NO. 808-65 AFT OIL COOLER SUPPORT — 320 SERIES
ONE REQUIRED PER AIRCRAFT
FULL SCALE

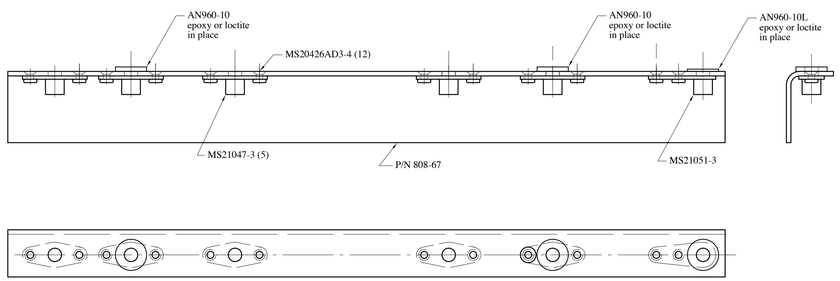

NO. 808-32 FORWARD OIL COOLER SUPPORT ASSEMBLY — 320 SERIES
ONE REQUIRED PER AIRCRAFT
FULL SCALE

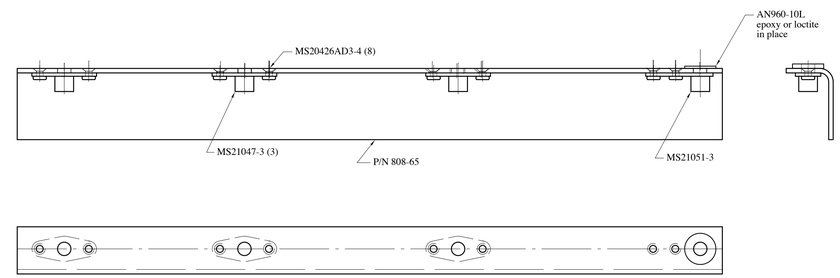

NO. 808-30 AFT OIL COOLER SUPPORT ASSEMBLY — 320 SERIES
ONE REQUIRED PER AIRCRAFT
FULL SCALE

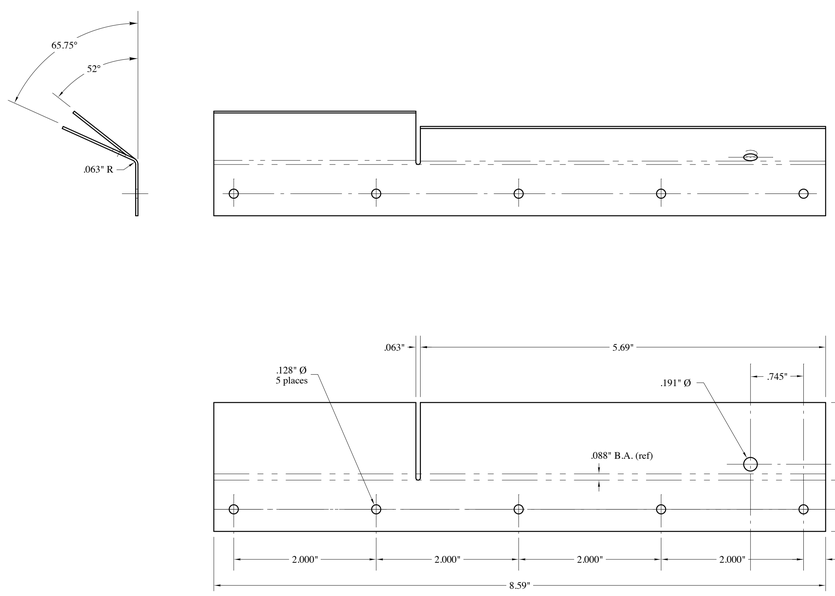

material: .032" 2024-T3 alclad aluminum sheet
alodine

NO. 808-22 LEFT FRONT BAFFLE DEFLECTOR — 320 SERIES
ONE REQUIRED PER AIRCRAFT
FULL SCALE

see Drawing No. xxx

NO. XXX
FULL SCALE

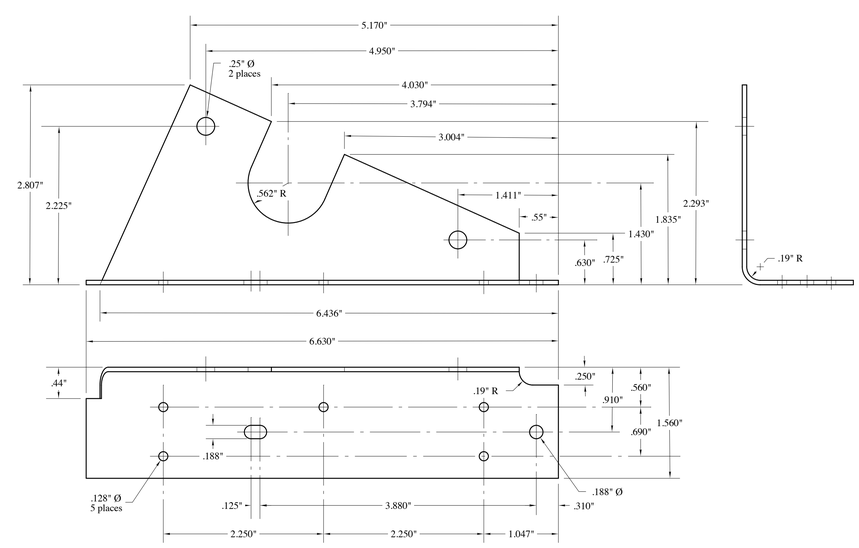

material: .063" 2024-T3 alclad aluminum sheet
alodine

NO. 808-34 LEFT INBOARD BAFFLE SUPPORT — 320 & 360 SERIES
ONE REQUIRED PER AIRCRAFT
FULL SCALE

F.8L FALCO

Sequoia Aircraft Corporation
2000 Tomlynn Street
P.O. Box 6861
Richmond, Virginia 23230

Sheet
B6
Revision ?

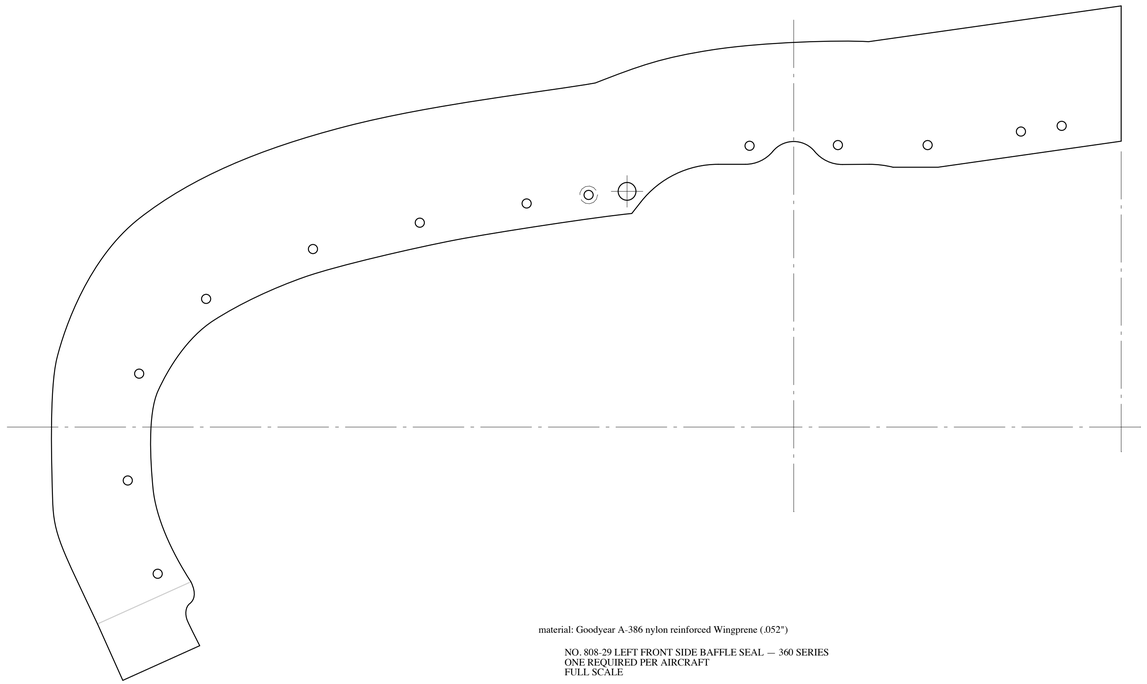

material: Goodyear A-386 nylon reinforced Wingprene (.052")

NO. 808-29 LEFT FRONT SIDE BAFFLE SEAL — 360 SERIES
ONE REQUIRED PER AIRCRAFT
FULL SCALE

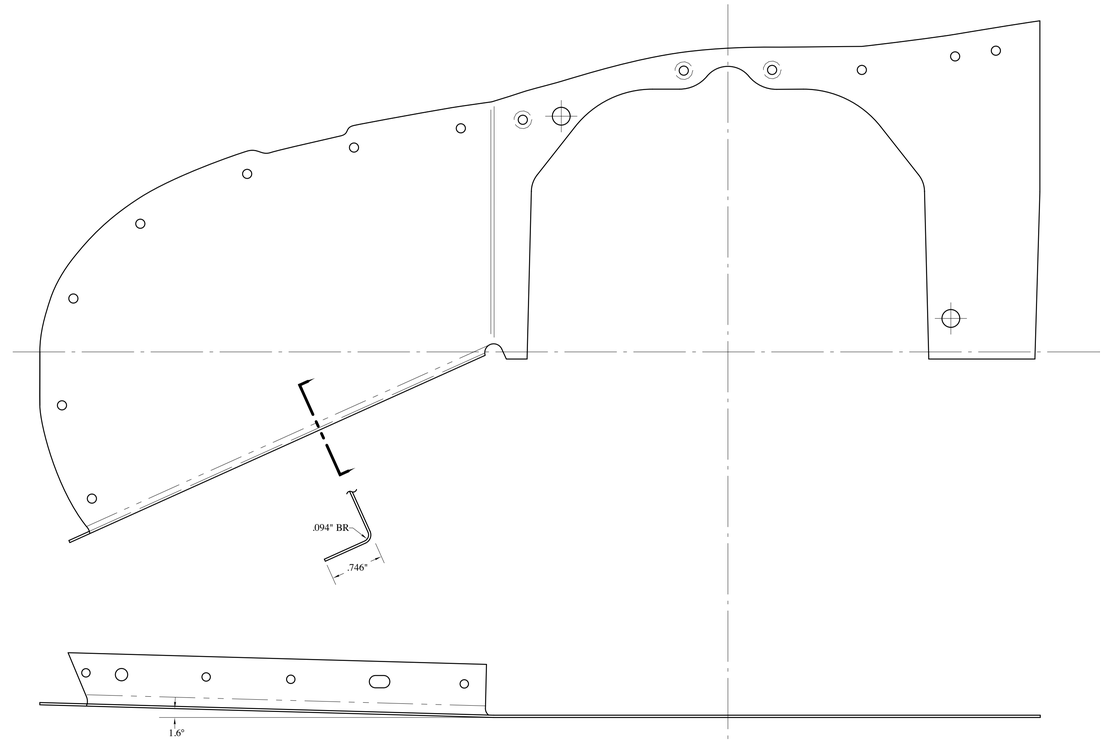

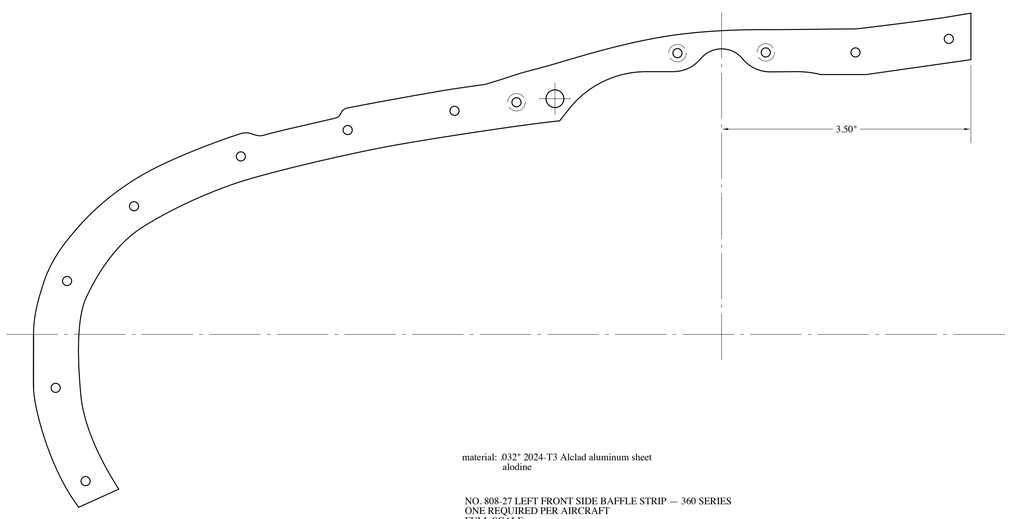

material: .032" 2024-T3 Alclad aluminum sheet
alodine

NO. 808-27 LEFT FRONT SIDE BAFFLE STRIP — 360 SERIES
ONE REQUIRED PER AIRCRAFT
FULL SCALE

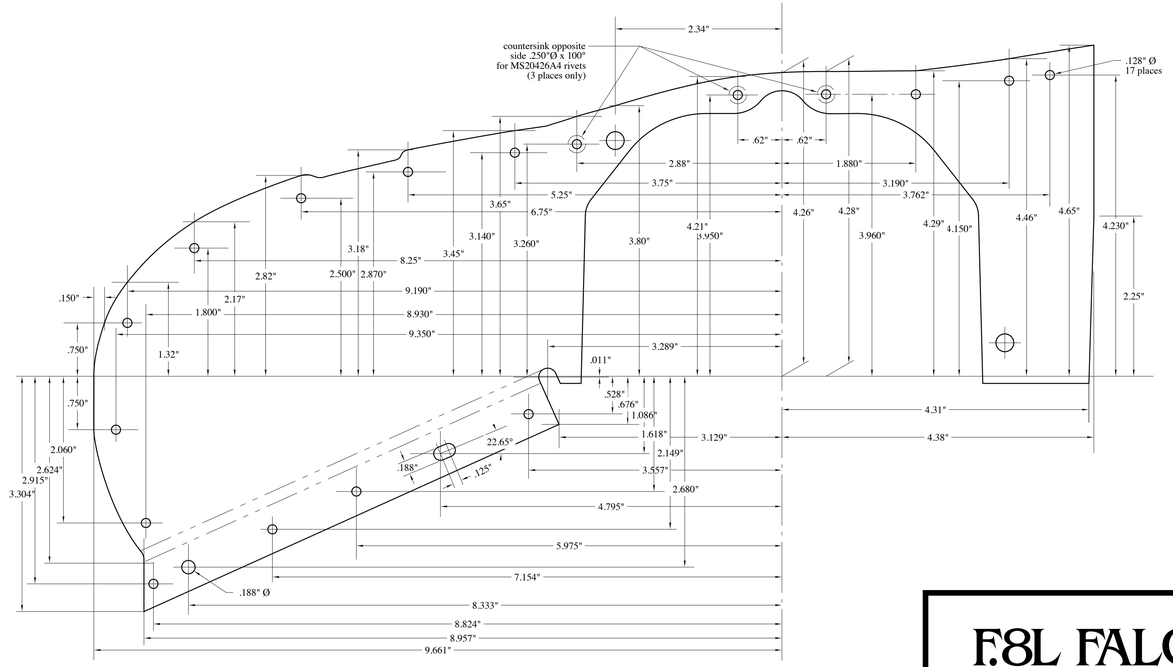

see Drawing No. xxx

NO. XXX
FULL SCALE

material: .032" 2024-T3 Alclad aluminum sheet
alodine

NO. 808-25 LEFT FRONT SIDE BAFFLE — 360 SERIES
ONE REQUIRED PER AIRCRAFT
FULL SCALE

F.8L FALCO

Sequoia Aircraft Corporation
2000 Tomlynn Street
P.O. Box 6861
Richmond, Virginia 23230

Sheet
B7
Revision ?

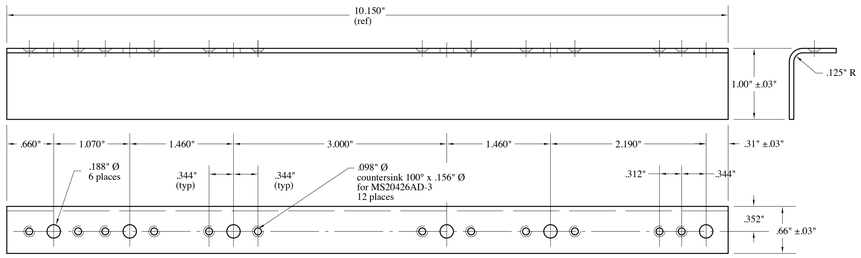

material: .063" 2024-0 alclad aluminum
heat treat to T4
alodine
for assembly P/N 808-33 assembly same as P/N 808-32 except uses P/N 808-68

NO. 808-68 FORWARD OIL COOLER SUPPORT — 360 SERIES
ONE REQUIRED PER AIRCRAFT
FULL SCALE

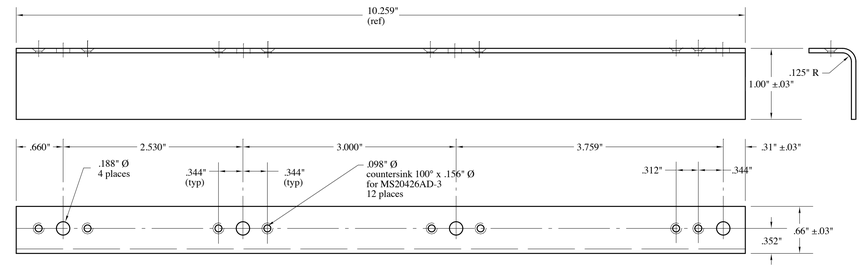

material: .063" 2024-0 alclad aluminum
heat treat to T4
alodine
for assembly P/N 808-31 assembly same as P/N 808-30 except uses P/N 808-66

NO. 808-66 AFT OIL COOLER SUPPORT — 360 SERIES
ONE REQUIRED PER AIRCRAFT
FULL SCALE

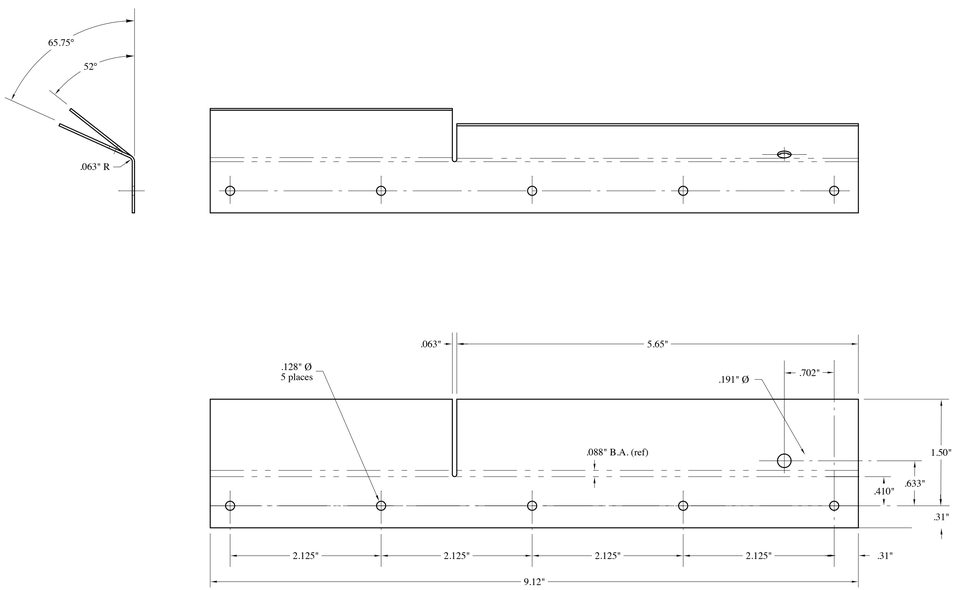

material: .032" 2024-T3 alclad aluminum sheet
alodine

NO. 808-23 LEFT FRONT BAFFLE DEFLECTOR — 360 SERIES
ONE REQUIRED PER AIRCRAFT
FULL SCALE

see Drawing No. xxx

NO. XXX
FULL SCALE

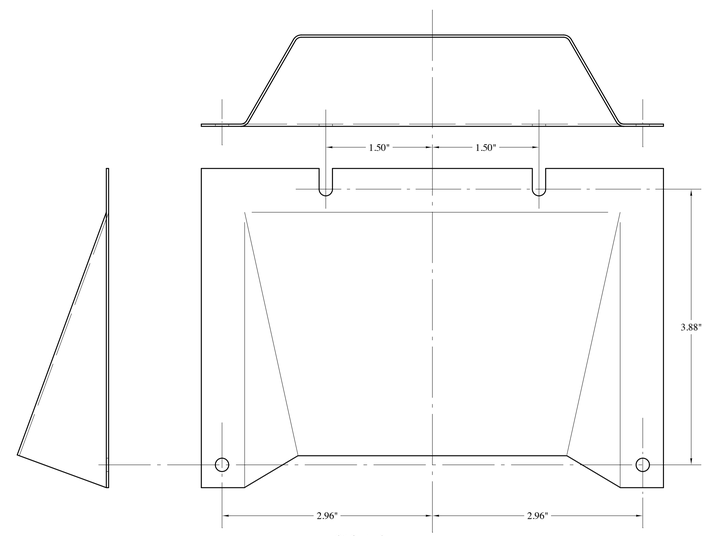

Oil Cooler Scoop
This is a preliminary design and will require flight experience to determine if needed to balance oil temp vs cyl temp.

For winterization kit, a flat plate with same hole pattern may be used, vis:

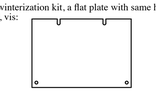

F.8L FALCO

Sequoia Aircraft Corporation
2000 Tomlynn Street
P.O. Box 6861
Richmond, Virginia 23230

Sheet
B8
Revision ?

Right Aft

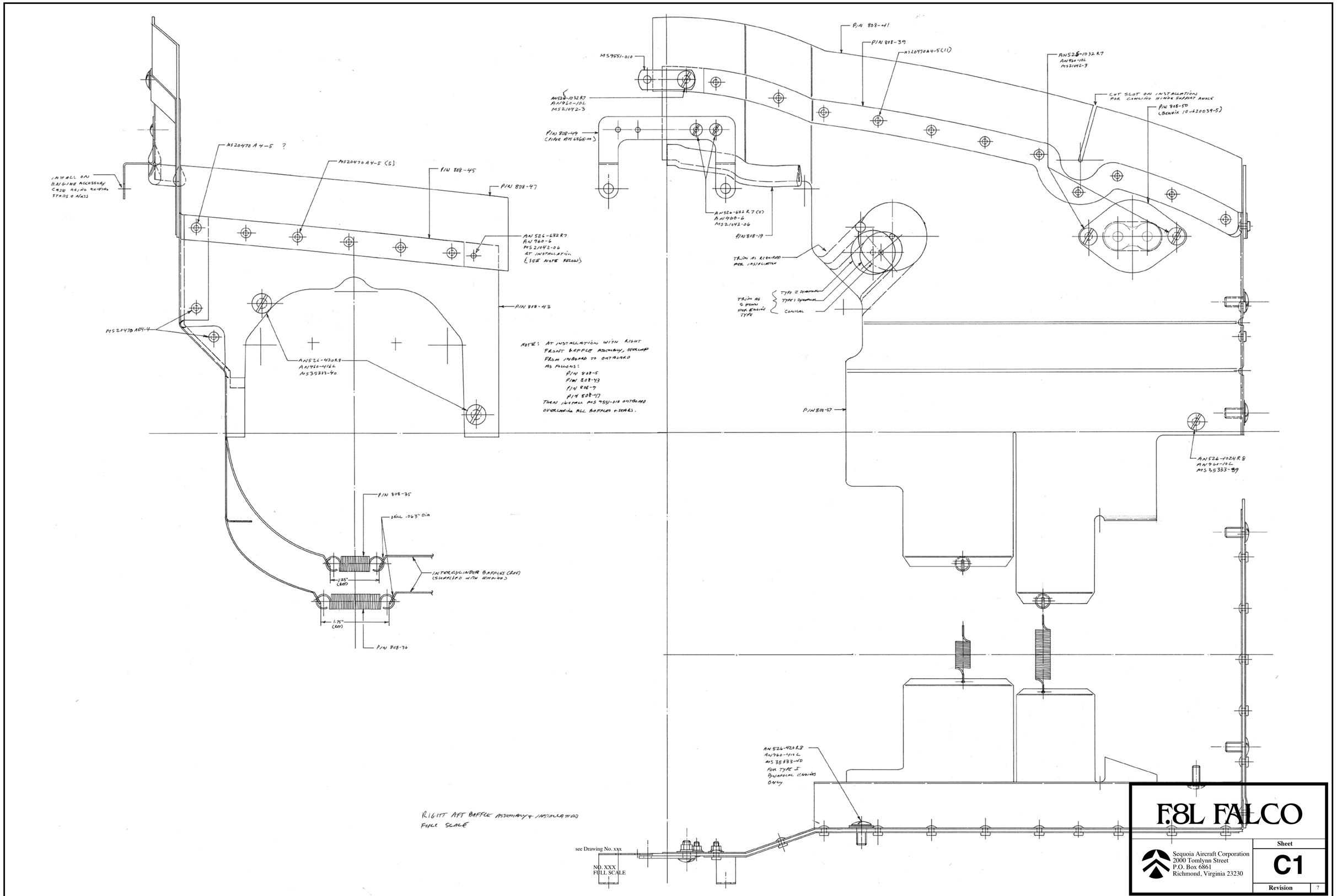
INSTALL ON ENGINE ACCESSORY CASE USING EXISTING STUDS & NUTS
MS20470 A4-5 ?
MS20470 A4-5 (5)
P/N 808-45
P/N 808-47
AN 526-632 R7
AN 960-6
MS 21042-06
AT INSTALLATION
(SEE NOTE BELOW)
P/N 808-43
MS20470 A04-4
AN526-4208
AN960-416L
MS35333-40
NOTE: AT INSTALLATION WITH RIGHT FRONT BAFFLE ASSEMBLY, OVERLAP FROM INBOARD TO OUTBOARD AS FOLLOWS:
P/N 808-5
P/N 808-43
P/N 808-7
P/N 808-47
THEN INSTALL MS 9551-010 OUTBOARD OVERLAPPING ALL BAFFLES & SEARS.
P/N 808-35
DRILL .063" DIA
INTERCYLINDER BAFFLES (REF) (SUPPLIED WITH ENGINES)
1.25" (REF)
1.75" (REF)
P/N 808-36
P/N 808-41
P/N 808-39
MS20470A4-5(1)
MS9551-010
AN526-1032R7
AN960-10L
MS21042-3
P/N 808-49
(PIPER P/N 66665-00)
AN526-632R7 (2)
AN960-6
MS21042-06
P/N 808-19
TRIM AS REQUIRED FOR INSTALLATION
TRIM AS SHOWN FOR ENGINE TYPE
TYPE 2 (SHOWN)
TYPE 1 (SHOWN)
CONICAL
AN526-1032R7
AN960-10L
MS21042-3
CUT SLOT ON INSTALLATION FOR COOLING HINGE SUPPORT ANGLE
P/N 808-50
(BENDIX 10-620039-5)
P/N 808-37
AN526-1024R8
AN960-10L
MS35333-39
AN526-428R8
AN960-416L
MS35333-40
FOR TYPE I
BINOCULAR ENGINES
ONLY
RIGHT AFT BAFFLE ASSEMBLY & INSTALLATION
FULL SCALE
see Drawing No. xxx
NO. XXX
FULL SCALE
F8L FALCO
Sequoia Aircraft Corporation
2000 Tomlynn Street
P.O. Box 6861
Richmond, Virginia 23230
Sheet
C1
Revision
?

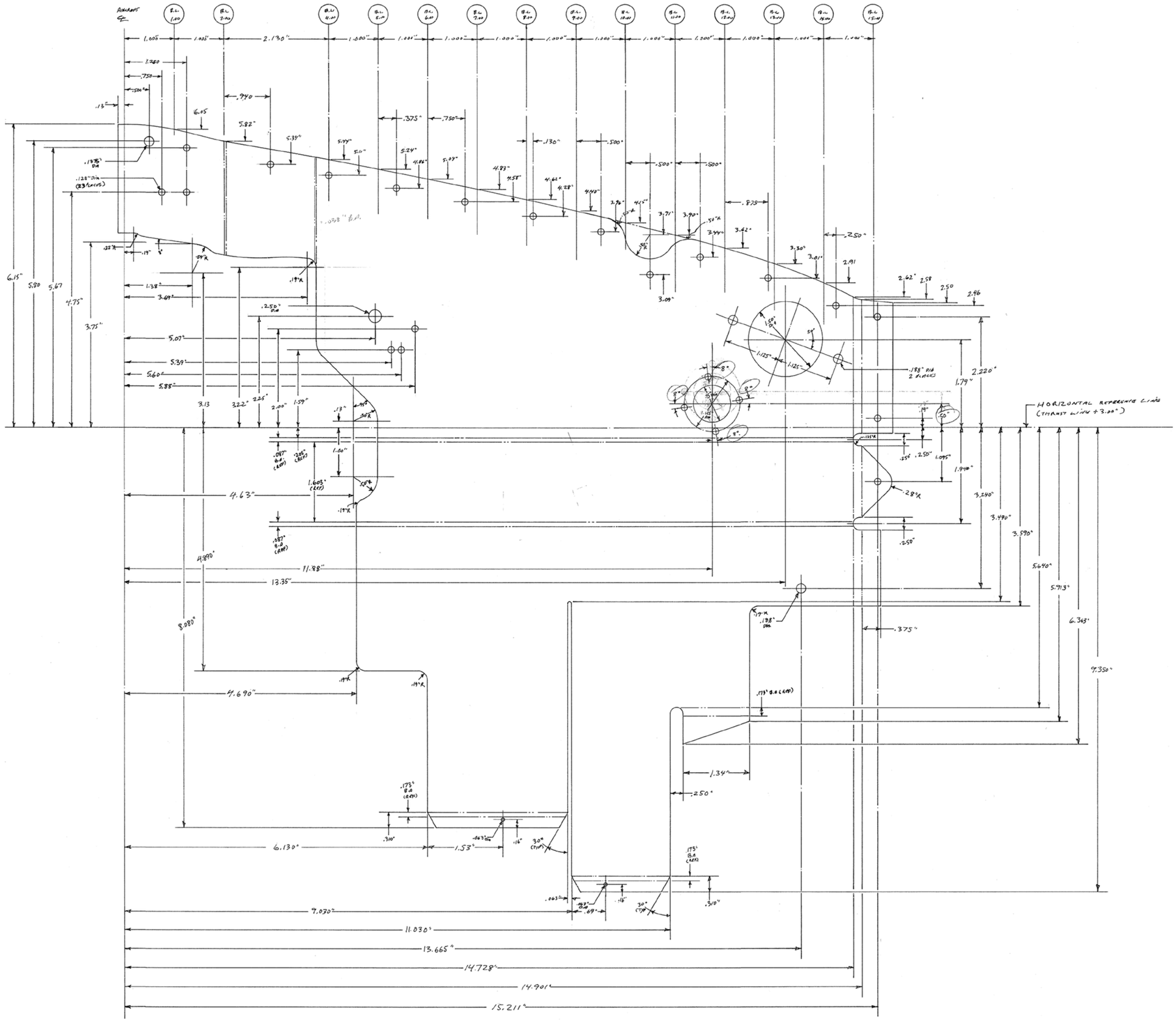

MATERIAL: .032" 2024-T3 ALCLAD ALUMINUM SHEET

Place Drawing No. xxx

N. 808-37 RIGHT AFT BAFFLE - 320 SERIES, SHEET 1
ONE REQUIRED PER AIRCRAFT
FULL SCALE

NO. XXX
FULLSCALE

F8L FALCO

Sequoia Aircraft Corporation
2000 Tomlynn Street
P.O. Box 6861
Richmond, Virginia 23230

Sheet
C2

Revision ?

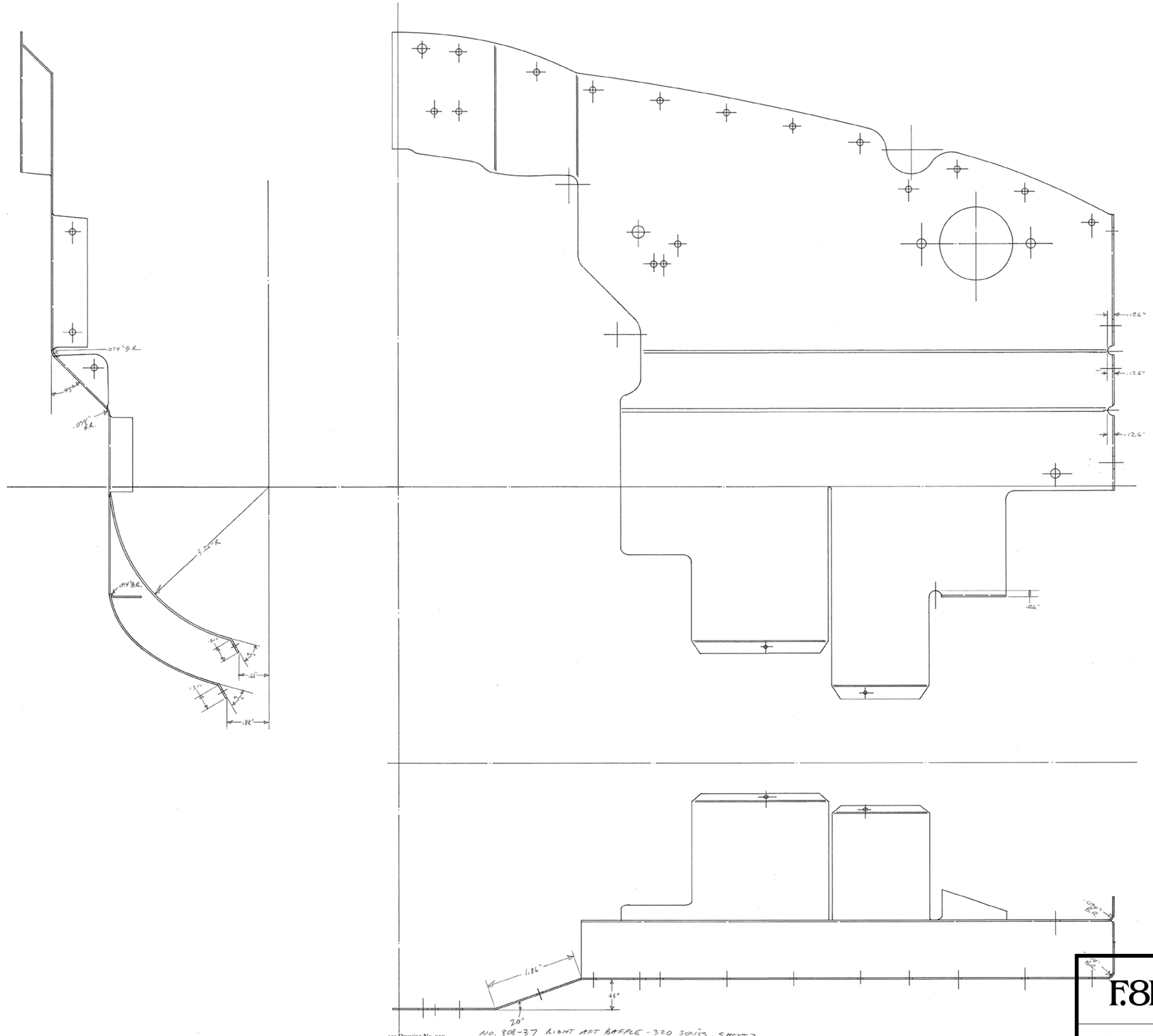

F.8L FALCO

Sequoia Aircraft Corporation
2000 Tomlynn Street
P.O. Box 6861
Richmond, Virginia 23230

Sheet

C3

Revision ?

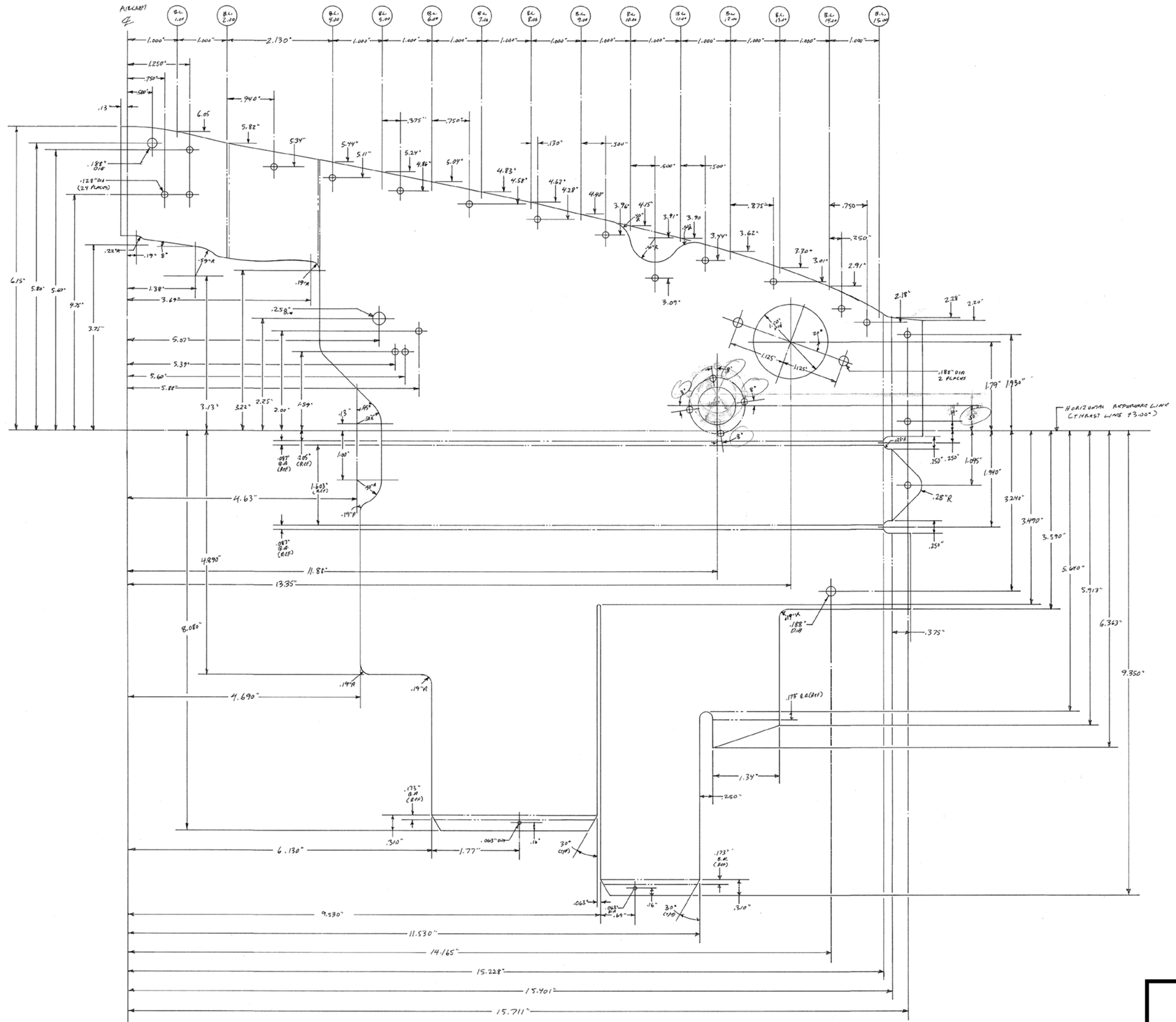

material: .032" 2024-T3 alclad aluminum sheet
alodine

see Drawing No. xxx

NO. XXX
FULL SCALE

NO. 808-38 RIGHT AFT BAFFLE — 360 SERIES
ONE REQUIRED PER AIRCRAFT
FULL SCALE

F8L FALCO

Sequoia Aircraft Corporation
2000 Tomlynn Street
P.O. Box 6861
Richmond, Virginia 23230

Sheet
C4

Revision ?

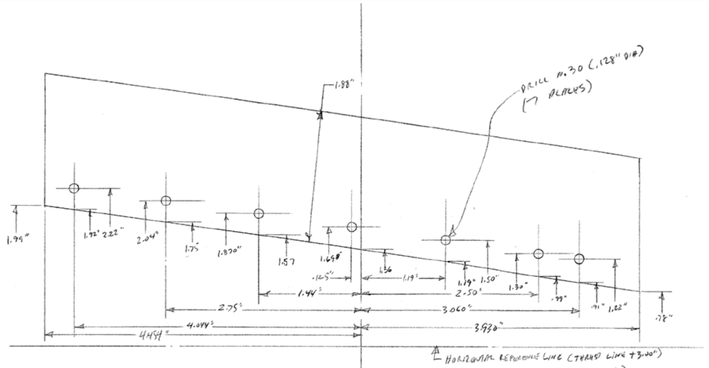

MATERIAL: GOODYEAR A-366 NYLON REINFORCED WITH NEOPRENE (.052")

No. 808-47 RIGHT AFT SIDE BAFFLE SEAL - 320 + 360 SERIES
ONE REQUIRED PER AIRCRAFT
FULL SCALE

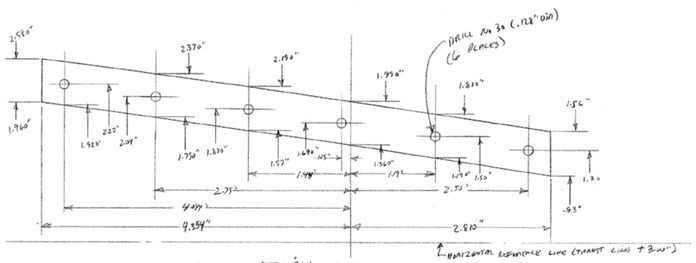

MATERIAL: .032" 2024-T3 ALCLAD ALUMINUM SHEET
ALCLADING

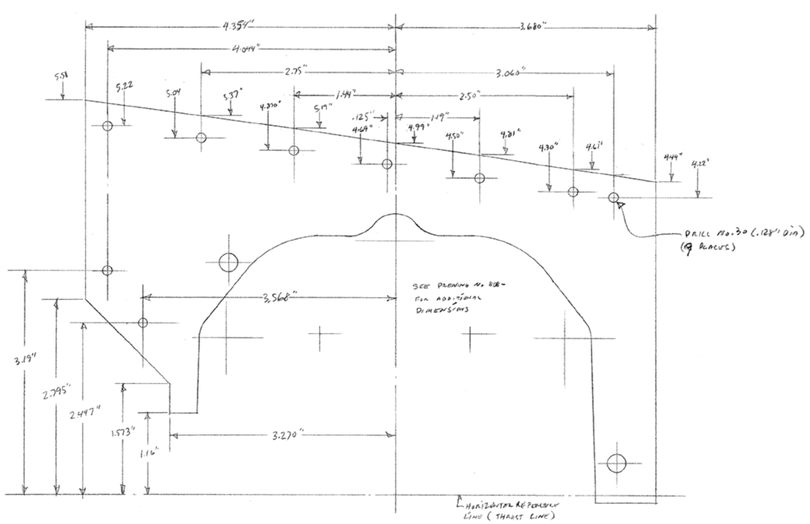

MATERIAL: .032" 2024-T3 ALCLAD ALUMINUM SHEET
ALCLADING

No. 808-43 RIGHT AFT SIDE BAFFLE - 320 SERIES
ONE REQUIRED PER AIRCRAFT
FULL SCALE

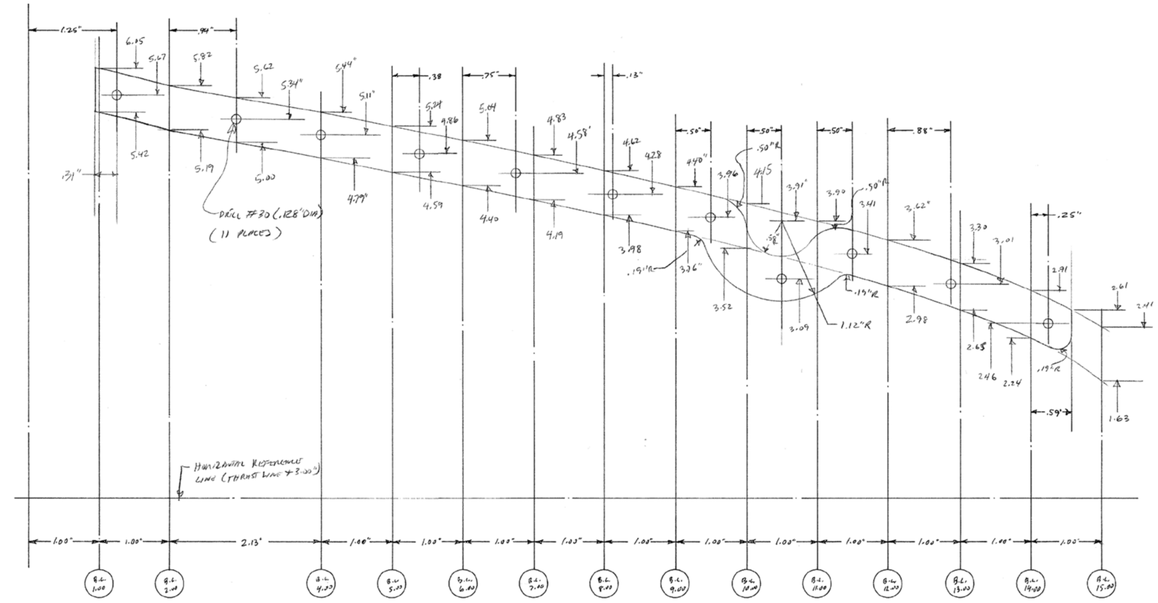

MATERIAL: .032" 2024-T3 ALCLAD ALUMINUM SHEET
ALCLADING

No. 808-39 RIGHT AFT BAFFLE STRIP - 320 SERIES
ONE REQUIRED PER AIRCRAFT
FULL SCALE

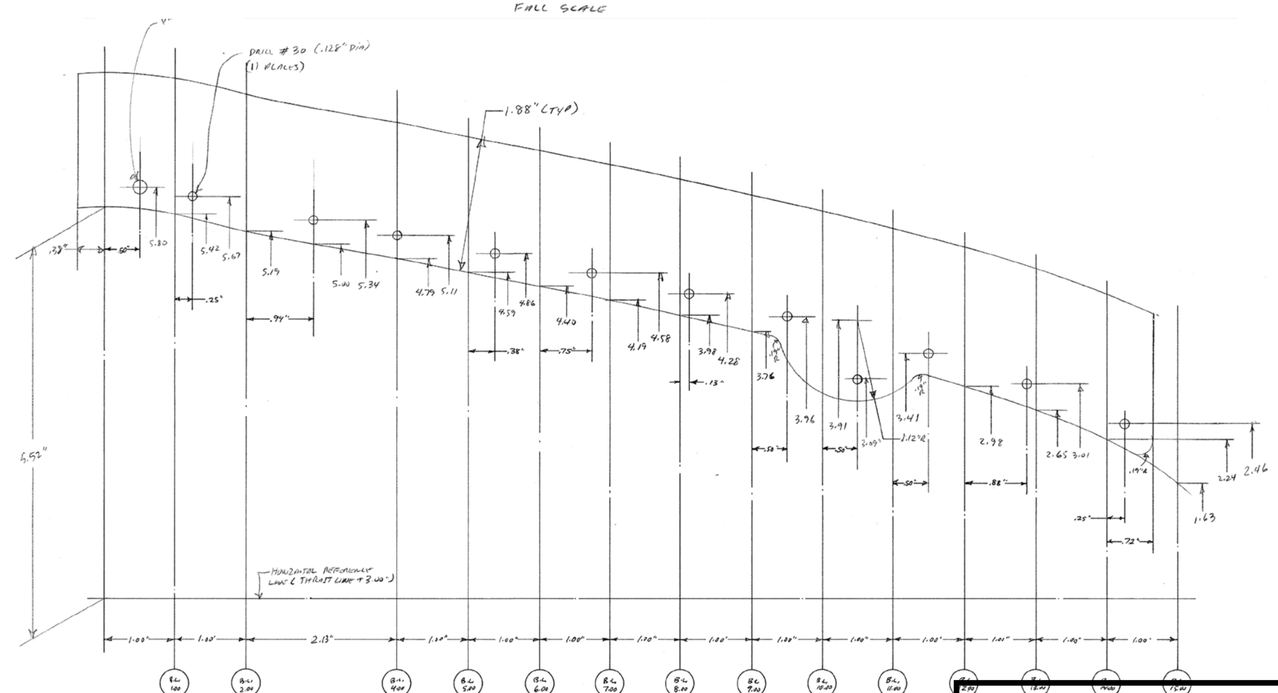

MATERIAL: GOODYEAR A-366 NYLON REINFORCED WITH NEOPRENE (.052")

No. 808-41 RIGHT AFT BAFFLE SEAL - 320 SERIES
ONE REQUIRED PER AIRCRAFT
FULL SCALE

see Drawing No. xxx

NO. XXX
FULL SCALE

F.8L FALCO

Sequoia Aircraft Corporation
2000 Tomlynn Street
P.O. Box 6861
Richmond, Virginia 23230

Sheet
C5

Revision ?

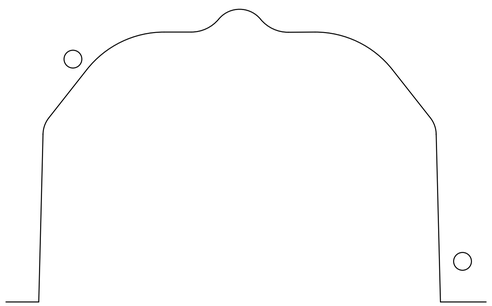

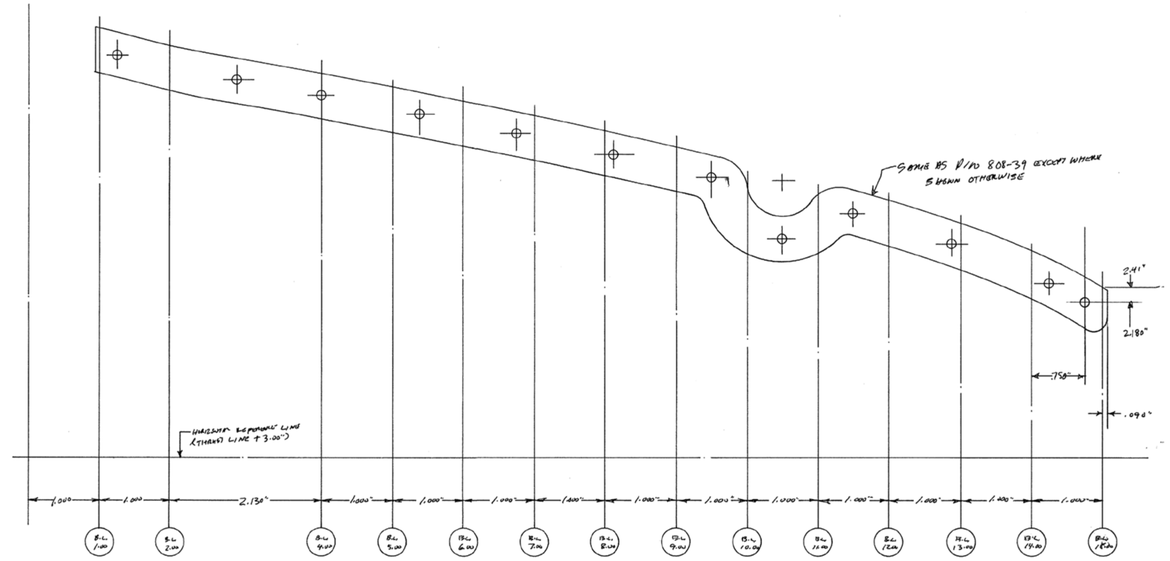

MATERIAL: .032" 2024-T3 ALCLAD ALUMINUM SHEET
ALODINE

No. 808-40 RIGHT AFT BAFFLE STRIP -360 SERIES
ONE REQUIRED PER AIRCRAFT
FULL SCALE

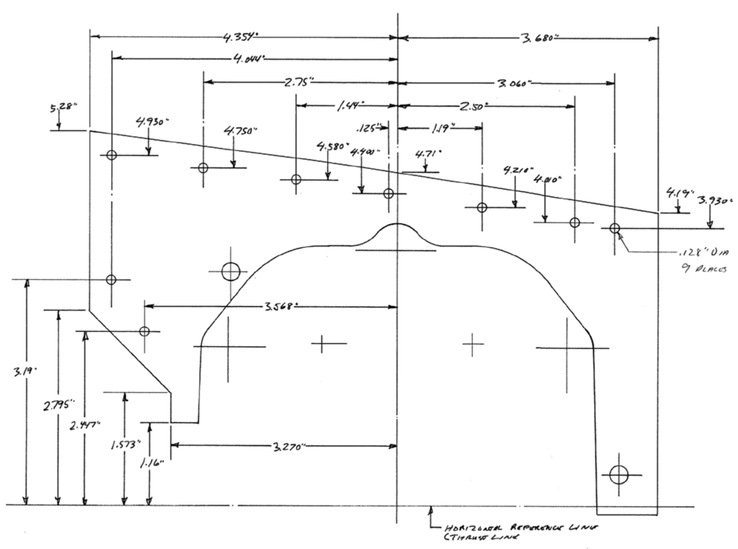

MATERIAL: .032" 2024-T3 ALCLAD ALUMINUM SHEET
ALODINE

No. 808-44 RIGHT AFT SIDE BAFFLE - 360 SERIES
ONE REQUIRED PER AIRCRAFT
FULL SCALE

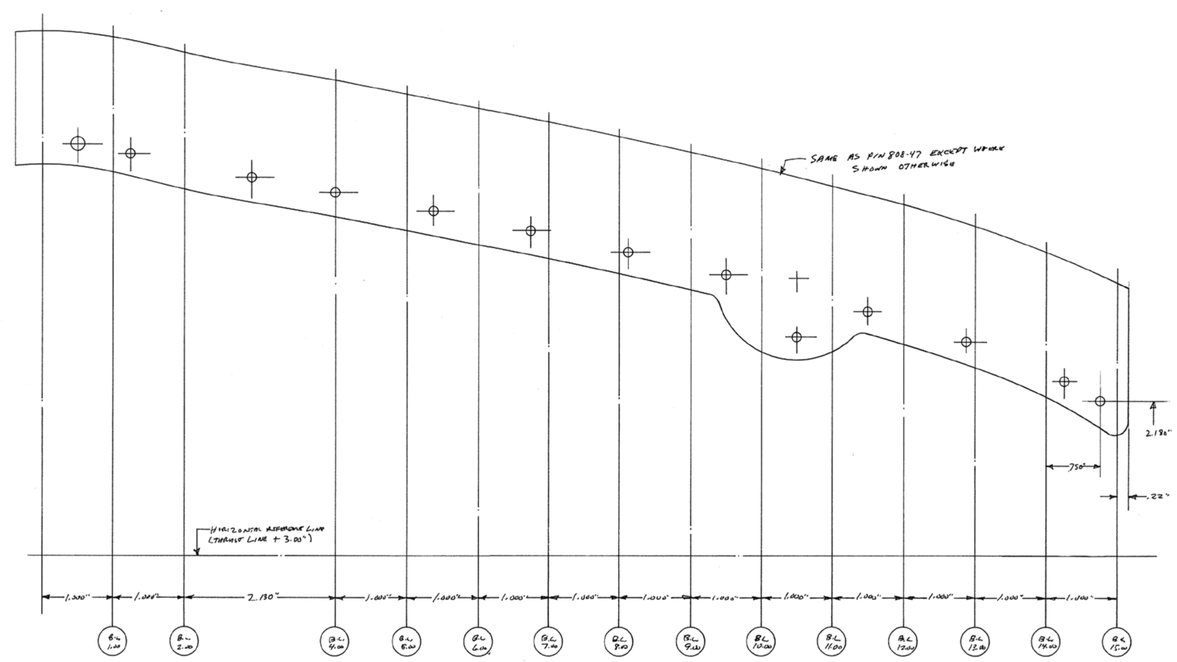

MATERIAL: GOODYEAR A-386 NYLON REINFORCED WIRING TAPE (.052")

No. 808-42 RIGHT AFT BAFFLE SEAL - 360 SERIES
ONE REQUIRED PER AIRCRAFT
FULL SCALE

see Drawing No. xxx

NO. XXX
FULL SCALE

F8L FALCO

Sequoia Aircraft Corporation
2000 Tomlynn Street
P.O. Box 6861
Richmond, Virginia 23230

Sheet
C6
Revision ?

D

Left Aft

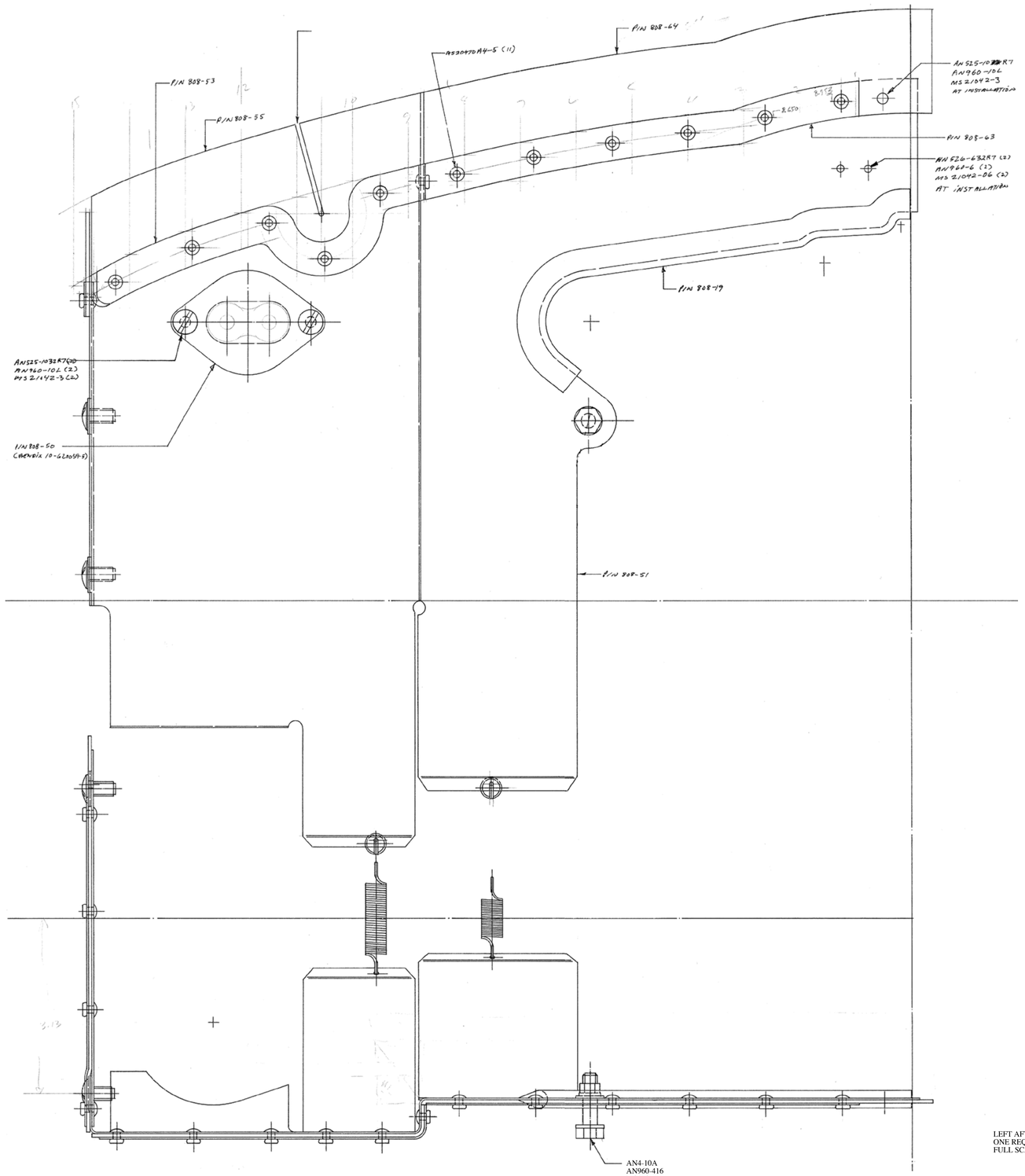

see Drawing No. xxx

NO. XXX
FULL SCALE

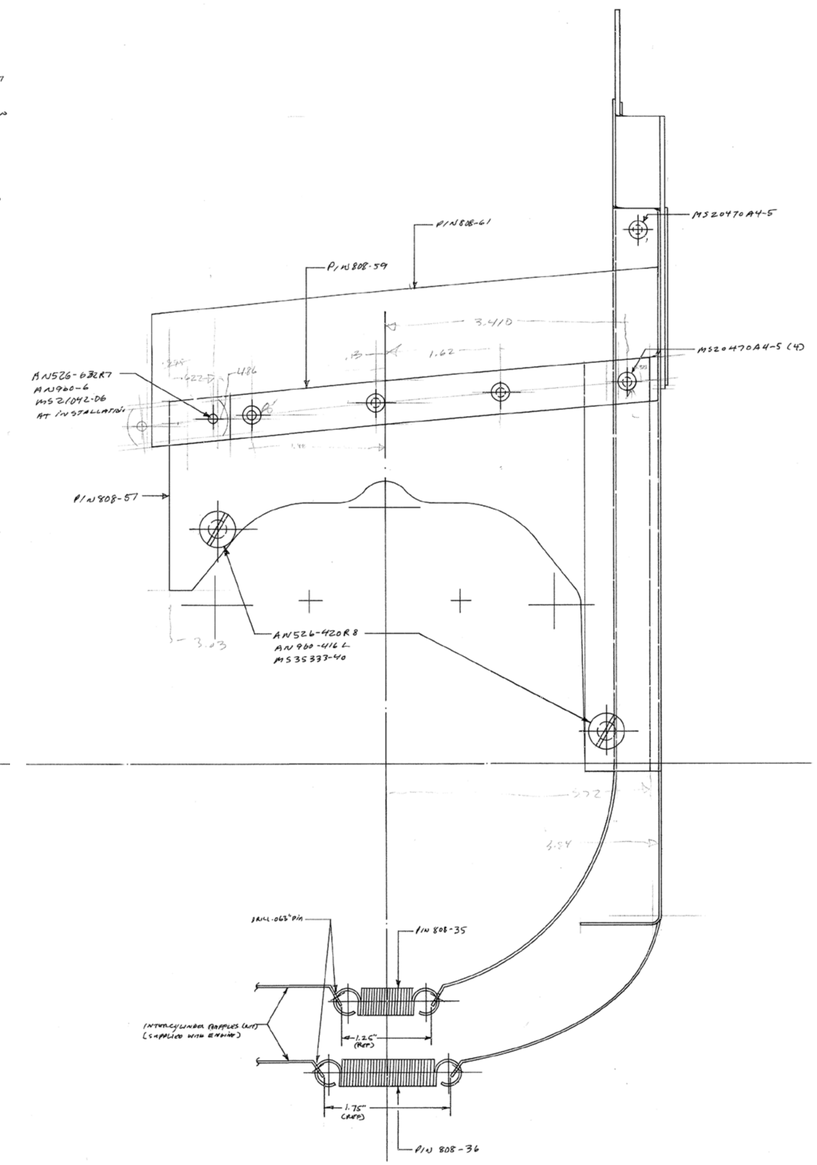

LEFT AFT BAFFLE ASSEMBLY & INSTALLATION
ONE REQUIRED PER AIRCRAFT
FULL SCALE

F.8L FALCO

Sequoia Aircraft Corporation
2000 Tomlynn Street
P.O. Box 6861
Richmond, Virginia 23230

Sheet
D1

Revision ?

FUEL LINE ROUTING
MS35489-135
FOR AEROQUIP 666-6 WITH FIRESLEEVE
OR
MS35489-15
FOR AEROQUIP 666-6
WITHOUT FIRESLEEVE

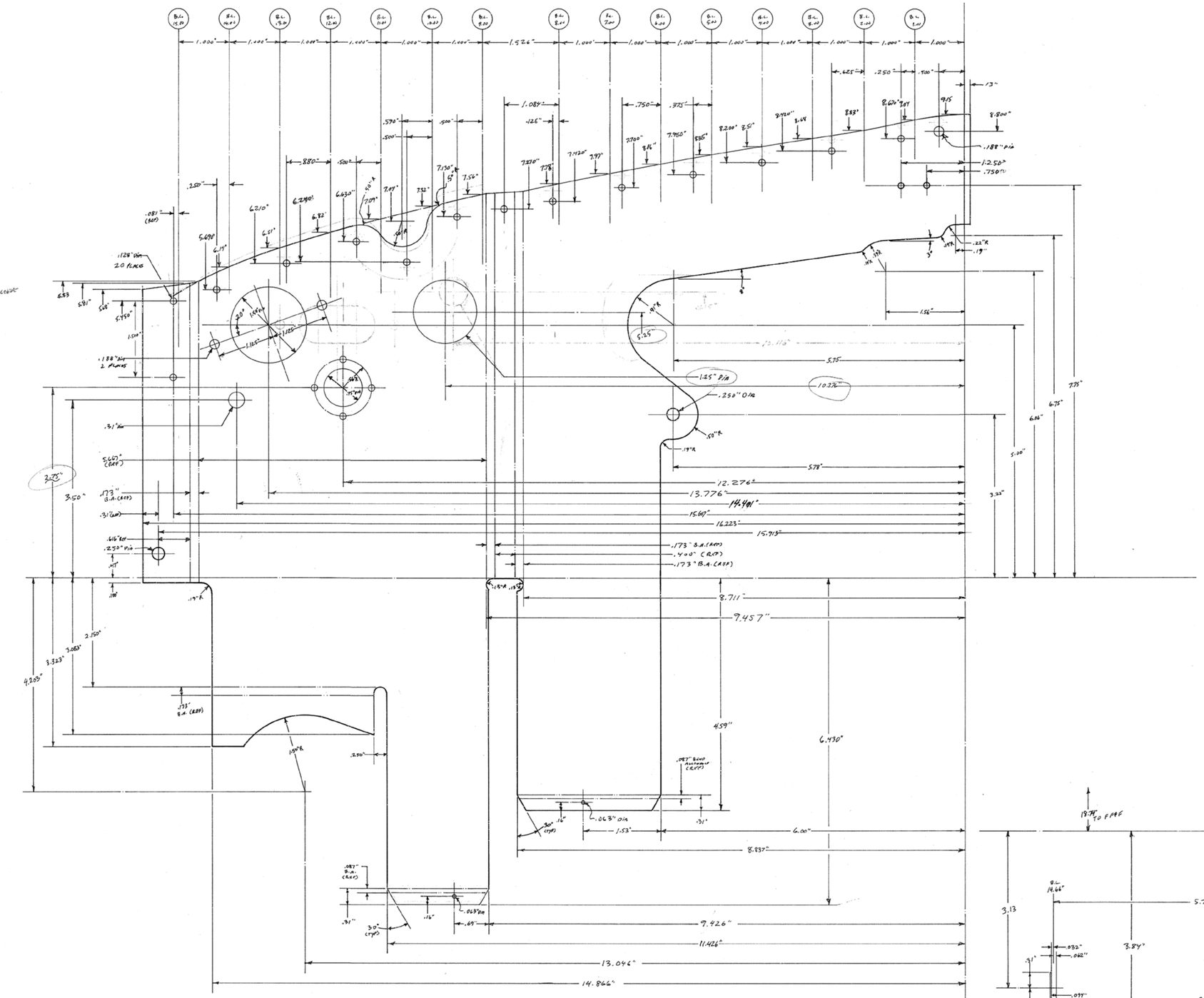
1.526"
1.089"
.750"
.375"
.625"
.250"
.500"
13"
.188" DIA
1.250"
.750"
.128" DIA
20 HOLES
.081" (REF)
.188" DIA
2 HOLES
1.25" DIA
.250" DIA
.31" DIA
5.640" (REF)
.173" B.A. (REF)
.31" (REF)
.646" REF
.250" DIA
.173" B.A. (REF)
.400" (REF)
.173" B.A. (REF)
12.276"
13.776"
14.491"
15.607"
16.223"
15.915"
8.711"
9.457"
6.430"
4.59"
.087" BEND RADIUS (REF)
.063" DIA
1.53"
6.00"
8.837"
.082" B.A. (REF)
.063" DIA
9.426"
11.426"
13.046"
14.866"
7.75"
6.75"
6.06"
5.00"
3.22"
3.50"
4.205"
3.323"
3.063"
2.750"
.173" B.A. (REF)
1.50" R
.250"
.19" R
.50" R
5.78"
5.75"
10.276"
5.25"
1.56"
.22" R
.19"
.31" DIA
.19" R
.188"
.250"
.31"
.16"
30° (TYP)
.16"
.31"
30° (TYP)
.69"
.19" R
.50" R
.19" R
.19" R
.19

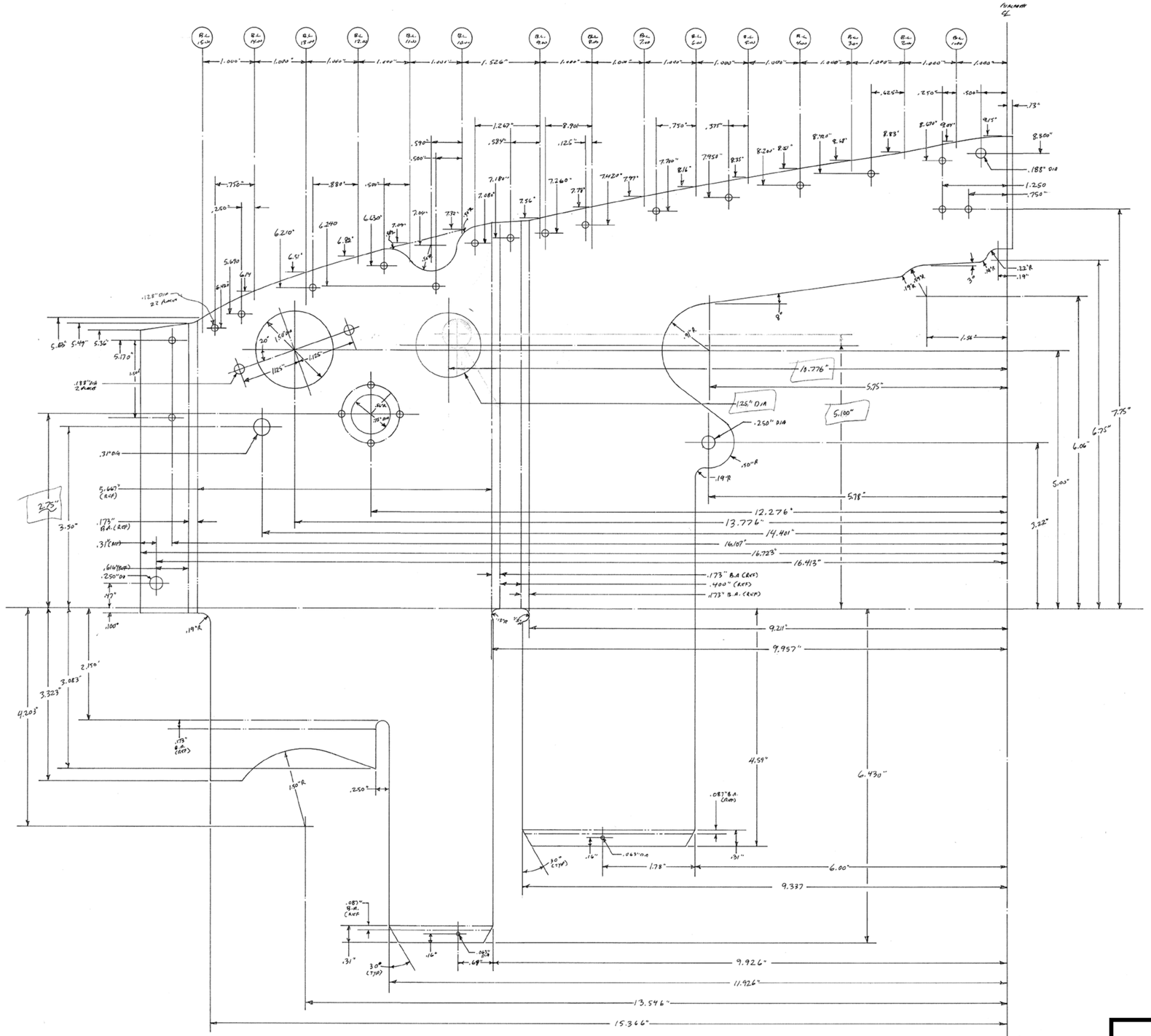

see Drawing No. xxx

NO. XXX
FULL SCALE

F8L FALCO

Sequoia Aircraft Corporation
2000 Tomlynn Street
P.O. Box 6861
Richmond, Virginia 23230

Sheet
D3

Revision ?

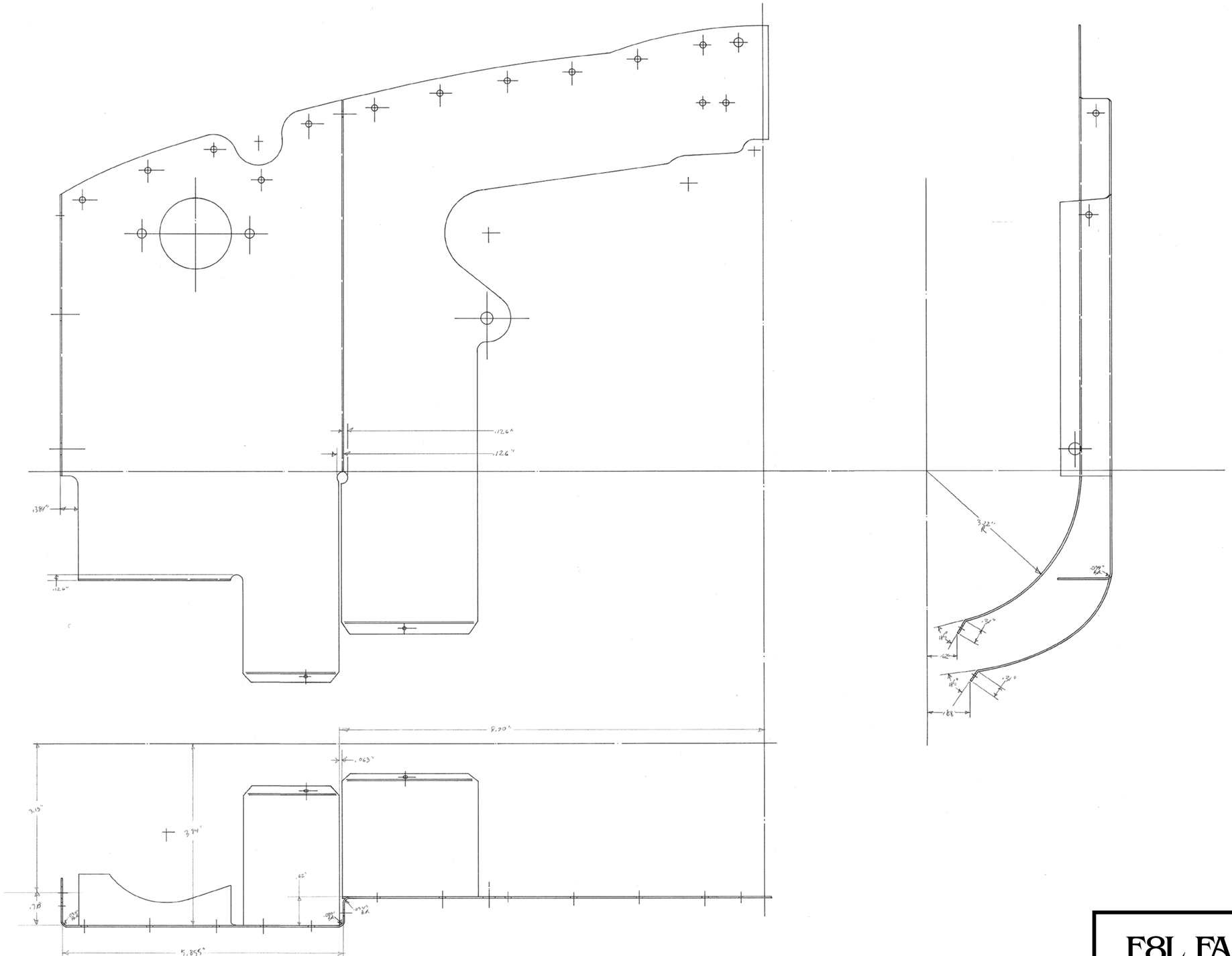

see Drawing No. xxx

NO. XXX
FULL SCALE

No. 808-51 LEFT AFT BULKHEAD - 320 SERIES, SHEET 2
FULL SCALE.

F.8L FALCO

Sequoia Aircraft Corporation
2000 Tomlynn Street
P.O. Box 6861
Richmond, Virginia 23230

Sheet	
D4	
Revision	?

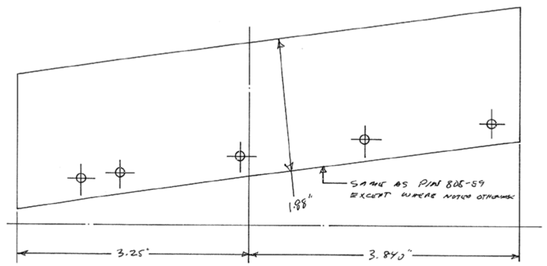

MATERIAL: GOODYEAR A-386 NYLON REINFORCED WINGPRENE (.052")

No. 808-60 LEFT AFT SIDE BAFFLE SEAL - 320 SERIES
ONE REQUIRED PER AIRCRAFT
FULL SCALE

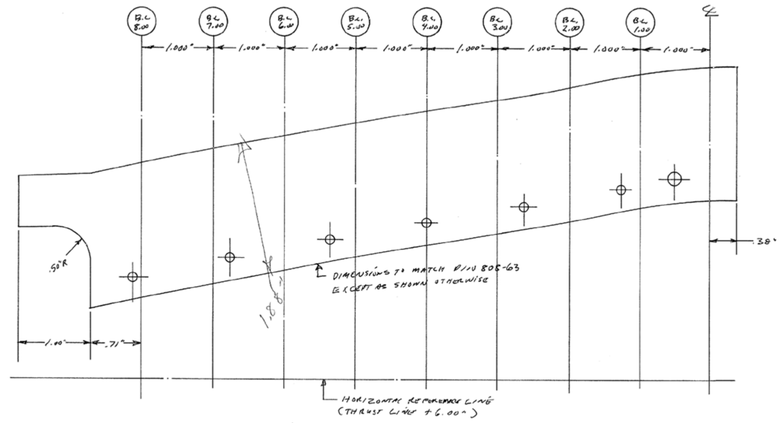

MATERIAL: GOODYEAR A-386 NYLON REINFORCED WINGPRENE (.052")

No. 808-64 LEFT AFT INBOARD BAFFLE SEAL - 320 SERIES
ONE REQUIRED PER AIRCRAFT
FULL SCALE

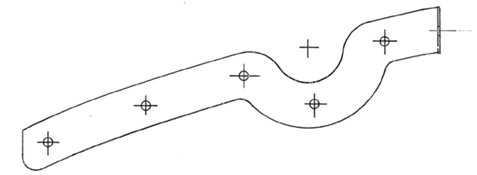

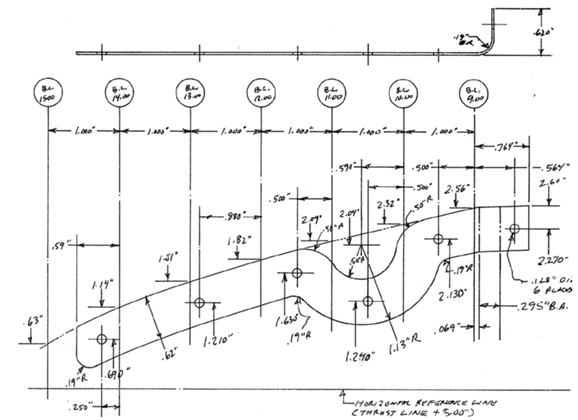

MATERIAL: .032" 2024-T3 ALCLAD ALUMINUM SHEET
ALODINE

No. 808-53 LEFT AFT OUTBOARD BAFFLE STRIP - 320 SERIES
ONE REQUIRED PER AIRCRAFT
FULL SCALE

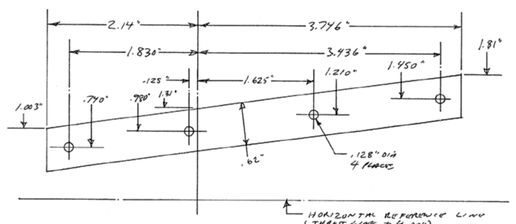

MATERIAL: .032" 2024-T3 ALCLAD ALUMINUM SHEET
ALODINE

No. 808-59 LEFT AFT SIDE BAFFLE STRIP - 320 SERIES
ONE REQUIRED PER AIRCRAFT
FULL SCALE

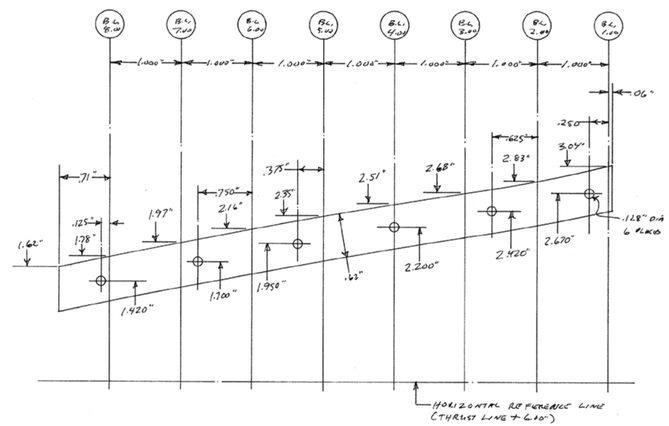

MATERIAL: .032" 2024-T3 ALCLAD ALUMINUM SHEET
ALODINE

NO. 808-63 LEFT AFT INBOARD BAFFLE STRIP — 320 SERIES
ONE REQUIRED PER AIRCRAFT
FULL SCALE

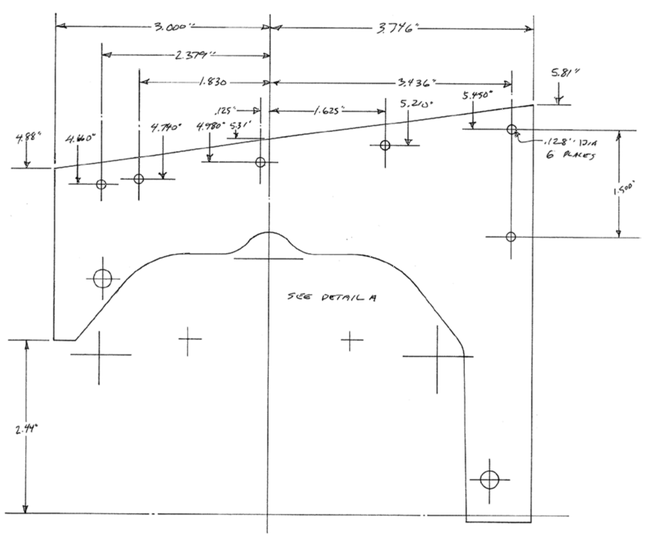

MATERIAL: .032" 2024-T3 ALCLAD ALUMINUM SHEET
ALODINE

No. 808-57 LEFT AFT SIDE BAFFLE - 320 SERIES
ONE REQUIRED PER AIRCRAFT
FULL SCALE

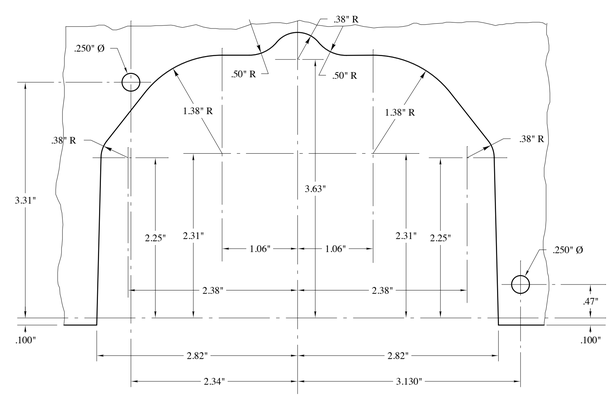

DETAIL A — TYPICAL CYLINDER HEAD CUT OUT
FULL SCALE

see Drawing No. xxx

NO. XXX
FULL SCALE

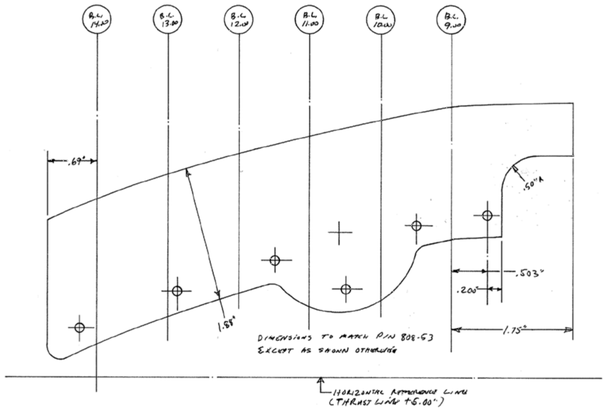

MATERIAL: GOODYEAR A-386 NYLON REINFORCED WINGPRENE (.052")

No. 808-55 LEFT AFT OUTBOARD BAFFLE SEAL - 320 SERIES
ONE REQUIRED PER AIRCRAFT
FULL SCALE

F8L FALCO

Sequoia Aircraft Corporation
2000 Tomlynn Street
P.O. Box 6861
Richmond, Virginia 23230

Sheet
D5
Revision ?

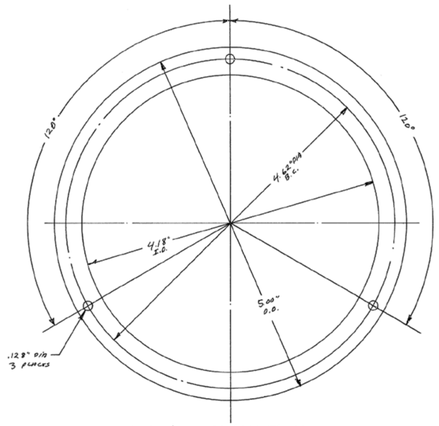

MATERIAL: .063" 6061-T6 ALUMINUM SHEET
ALODINE
No. 840-14 LANDING LIGHT RETAINING RING
ONE REQUIRED PER AIRCRAFT
FULL SCALE

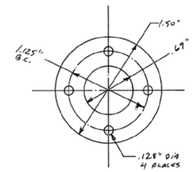

MATERIAL: .063" 6061-T6 ALUMINUM SHEET
No. 808-74 MAGNETO BLAST TUBE FLANGE
2 REQUIRED PER AIRCRAFT
FULL SCALE

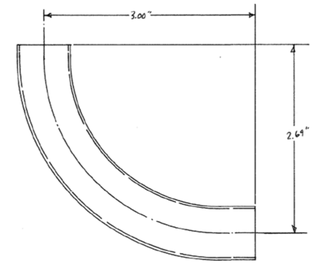

MATERIAL: .75" OD X .035" WALL
6061-T6 ALUMINUM TUBING
No. 808-72 LEFT MAGNETO BLAST TUBE
ONE REQUIRED PER AIRCRAFT
FULL SCALE

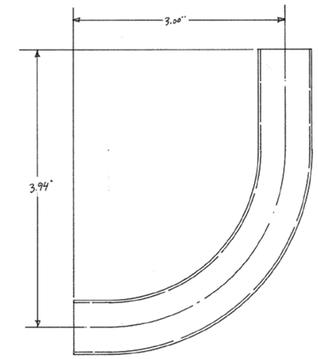

MATERIAL: .75" OD X .035" 6061-T6 ALUMINUM TUBING
No. 808-73 RIGHT MAGNETO BLAST TUBE -
ONE REQUIRED PER AIRCRAFT
FULL SCALE

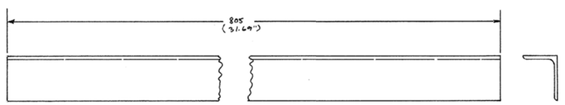

MATERIAL: 2024-T3511 ALUMINUM EXTRUSION
AMD 10134-0501 (.625"X.500"X.050")
ALODINE
No. 840-16 HINGE ANGLE
2 REQUIRED PER AIRCRAFT
FULL SCALE

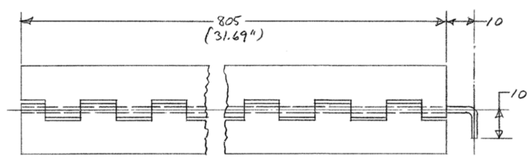

MATERIAL: MS20001A3 PIANO HINGE
HINGE WIRE: .089" DIA STAINLESS STEEL WIRE
No. 840-6 COWLING HINGE
2 REQUIRED PER AIRCRAFT
FULL SCALE

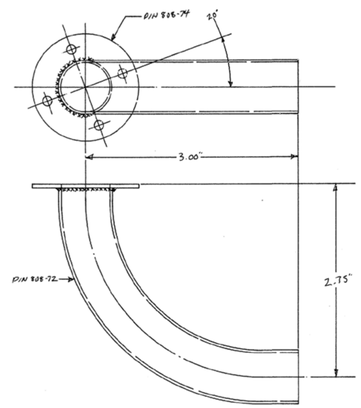

ALODINE
No. 808-70 LEFT MAGNETO BLAST TUBE ASSEMBLY - 3204360 SERIES
ONE REQUIRED PER AIRCRAFT
FULL SCALE

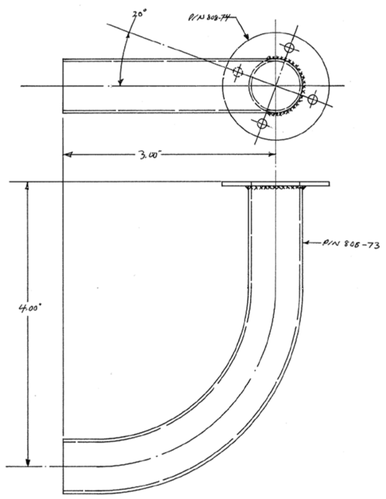

ALODINE
No. 808-71 RIGHT MAGNETO BLAST TUBE ASSEMBLY - 3204360 SERIES
ONE REQUIRED PER AIRCRAFT
FULL SCALE

see Drawing No. xxx

NO. XXX
FULL SCALE

F8L FALCO

Sequoia Aircraft Corporation
2000 Tomlynn Street
P.O. Box 6861
Richmond, Virginia 23230

Sheet
D6
Revision ?

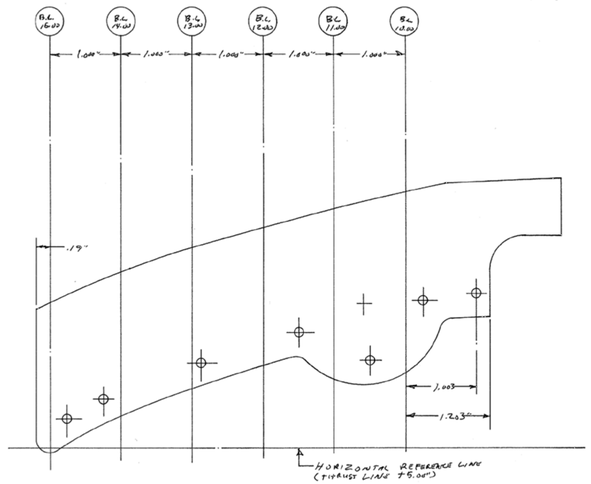

MATERIAL: GOODYEAR A-386 NYLON REINFORCED WINGFRAME (.052")

No. 808-56 LEFT AFT OUTBOARD BAFFLE SEAL - 360 SERIES
ONE REQUIRED PER AIRCRAFT
FULL SCALE

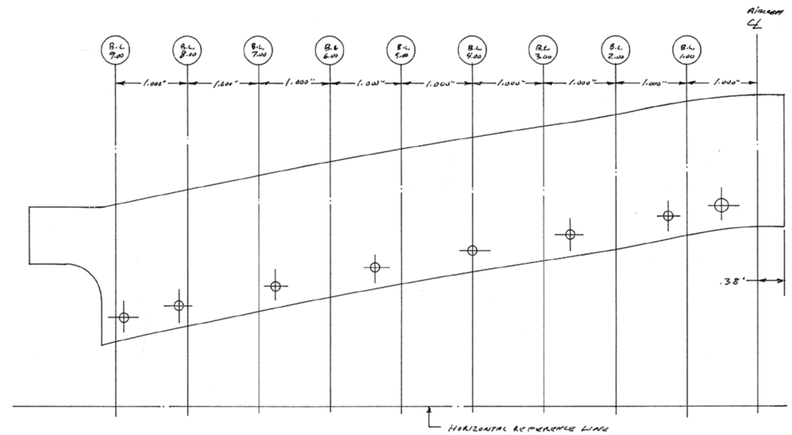

MATERIAL: GOODYEAR A-386 NYLON REINFORCED WINGFRAME (.052")

No. 808-62 LEFT AFT INBOARD BAFFLE SEAL - 360 SERIES
ONE REQUIRED PER AIRCRAFT
FULL SCALE

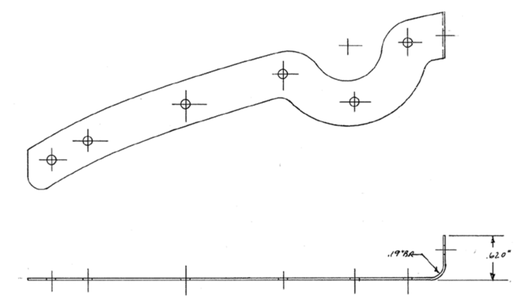

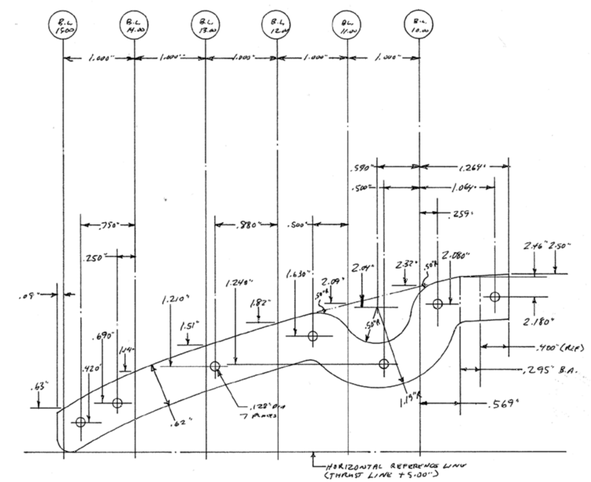

MATERIAL: .032" 2024-T3 ALCLAD ALUMINUM ALODINE

No. 808-54 LEFT AFT OUTBOARD BAFFLE STRIP - 320 SERIES
ONE REQUIRED PER AIRCRAFT
FULL SCALE

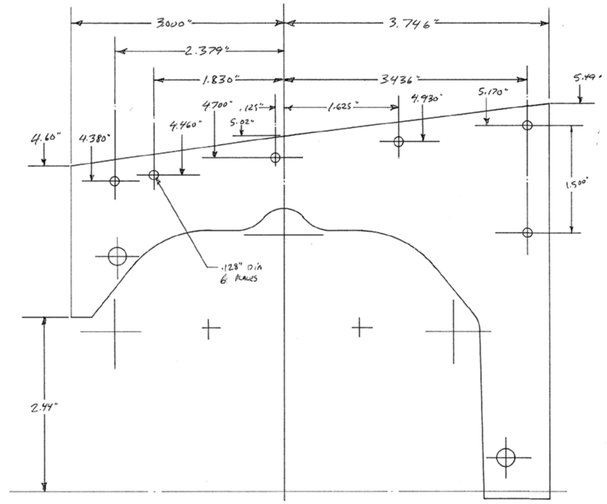

MATERIAL: .032" 2024-T3 ALCLAD ALUMINUM SHEET
ALODINE

No. 808-58 LEFT AFT SIDE BAFFLE - 360 SERIES
ONE REQUIRED PER AIRCRAFT
FULL SCALE

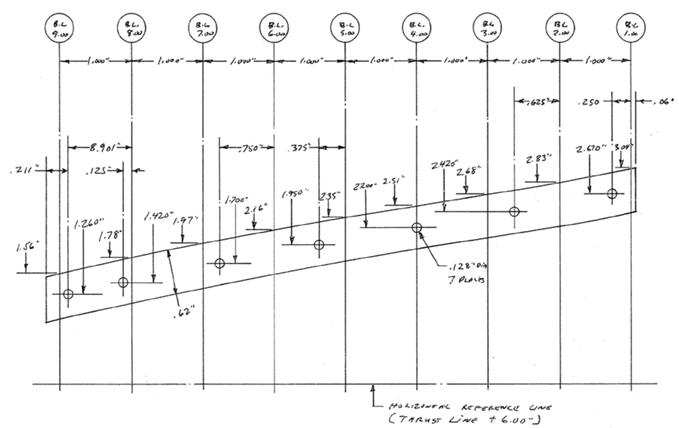

MATERIAL: .032" 2024-T3 ALCLAD ALUMINUM SHEET
ALODINE

No. 808-61 LEFT AFT INBOARD BAFFLE STRIP - 360 SERIES
ONE REQUIRED PER AIRCRAFT
FULL SCALE

see Drawing No. xxx

NO. XXX
FULL SCALE

F8L FALCO

Sequoia Aircraft Corporation
2000 Tomlynn Street
P.O. Box 6861
Richmond, Virginia 23230

Sheet
D7
Revision ?